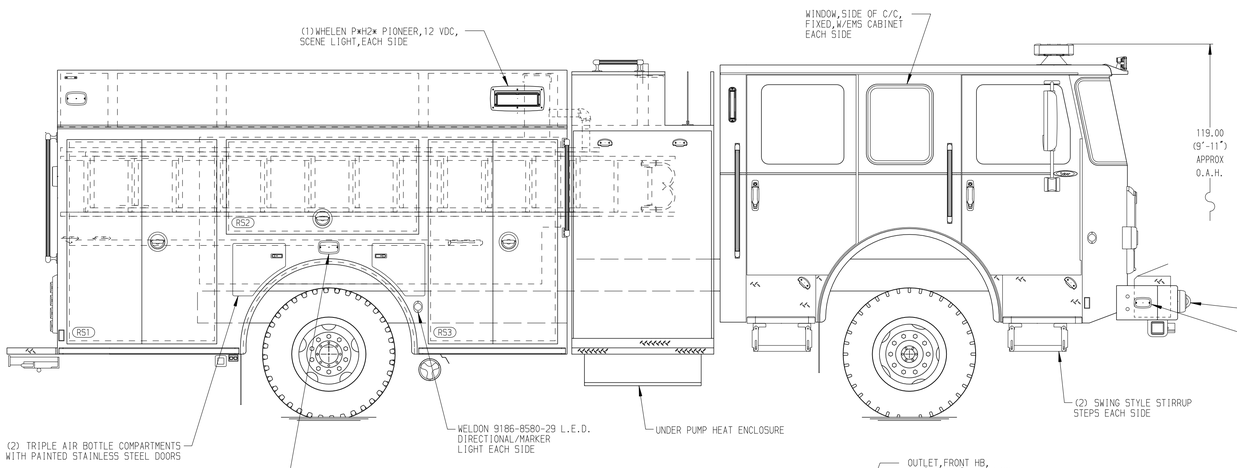

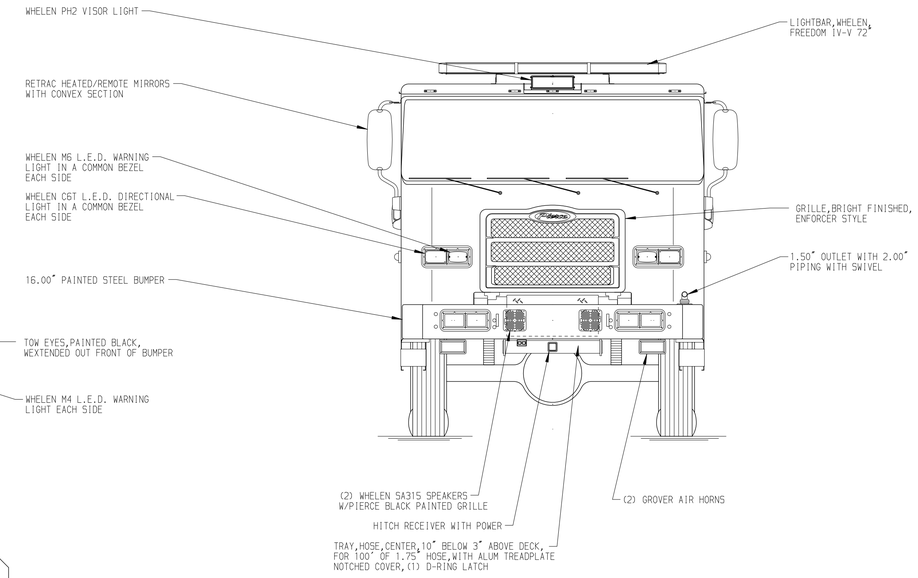

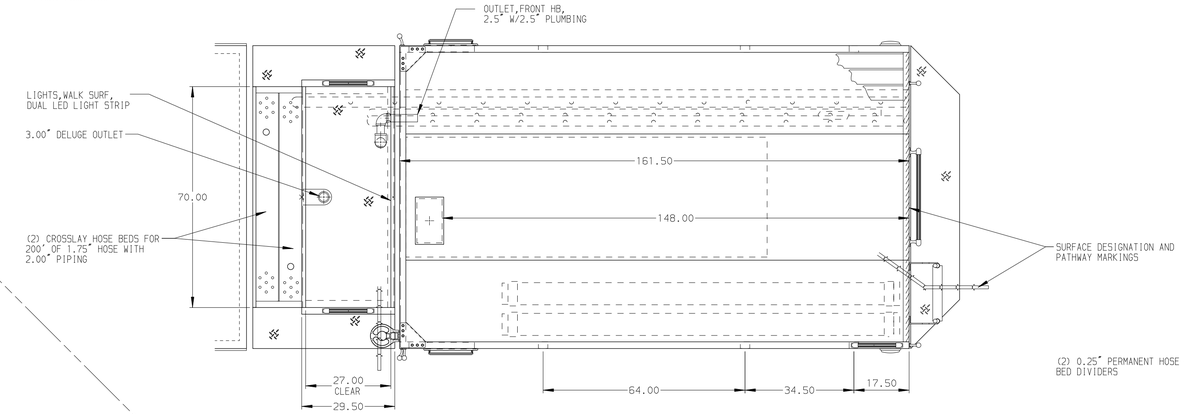

HOSEBED CAPACITIES

1. 1000' OF 5.00" D.J. POLY HOSE
2. 200' OF 2.50" D.J. POLY HOSE
3. 500' OF 2.50" D.J. POLY HOSE

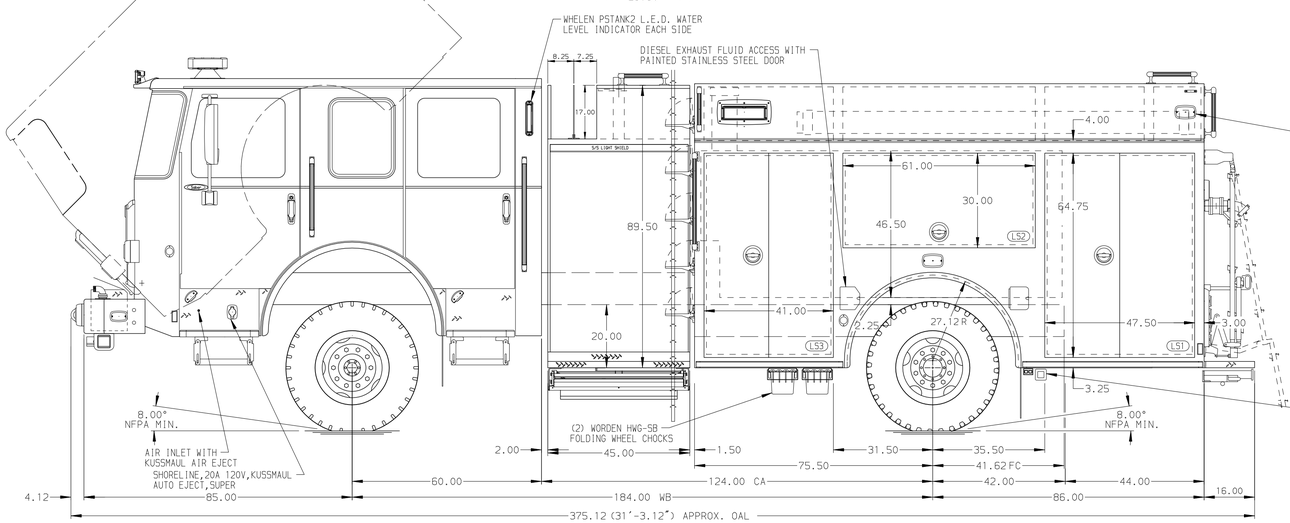

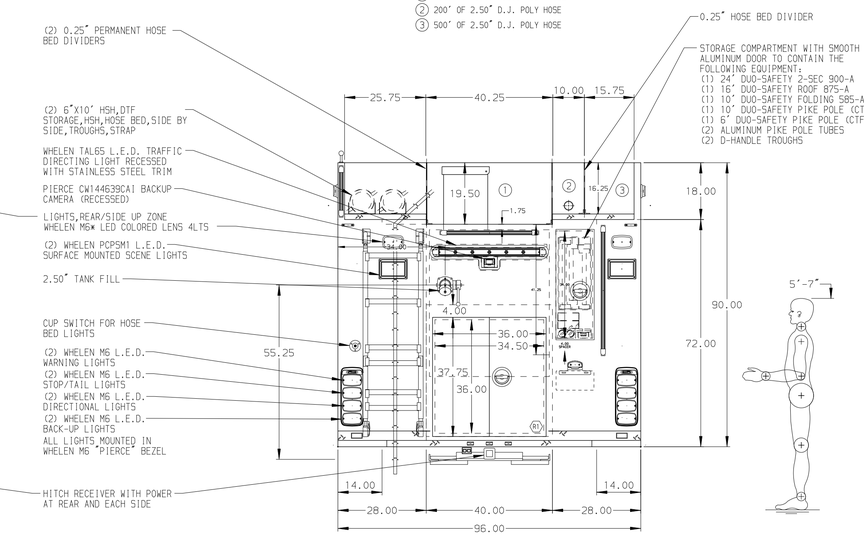

ALUMINUM BODY

NOTE

DIMENSIONS SHOWN ARE APPROXIMATE AND ARE SUBJECT TO MINOR DEVIATIONS AS MAY OCCUR OR BE NECESSARY IN CONSTRUCTION.
MINOR DETAILS NOT SHOWN.

REV	DATE	BY	CH
7	11MAY20	RHU	AJA
6	07APR20	JLA	AJA
5	02APR20	JLA	AJA
4	14FEB20	BST	KOU

CHASSIS DATA
MAKE: PIERCE
MODEL: SABER FR STEP FRAME

Pierce MANUFACTURING INC.

TITLE: 1500-D-750P,161" PUMPER BODY,DELUGE,(2) CROSSLAYS LADDERS BETWEEN TANK AND BODY

FOR: CEDAR AREA FIRE & RESCUE DEPARTMENT, CEDAR, MI

DWG NO.: 34877AD

JOB NO.	34877
SCALE	1:24
DATE	
DRAWN BY	BST 10FEB20
CHECKED BY	KOU 11FEB20
SHEET SIZE	D
SHEET NO.	1 OF 1

View File Created 11-MAY-2020 13:20:44