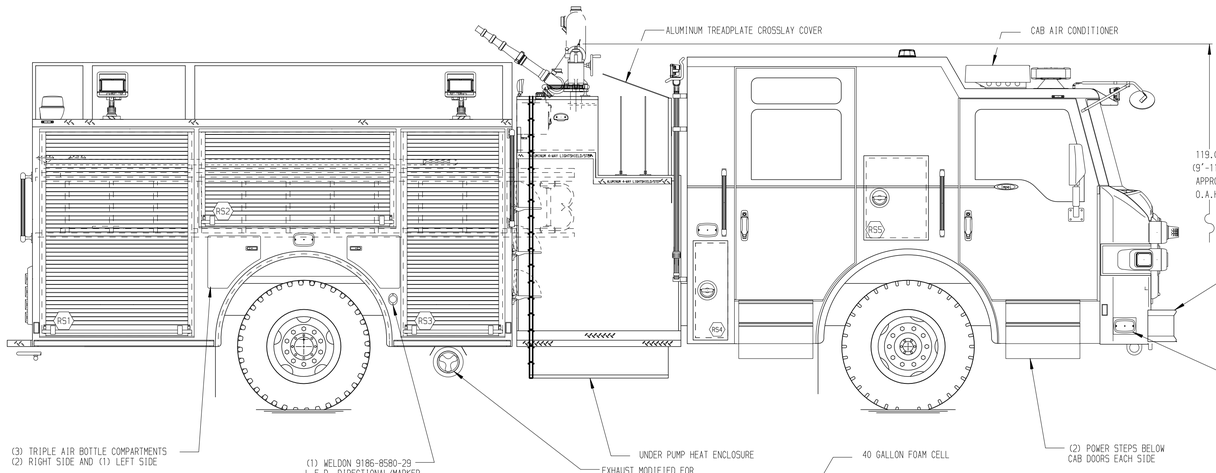

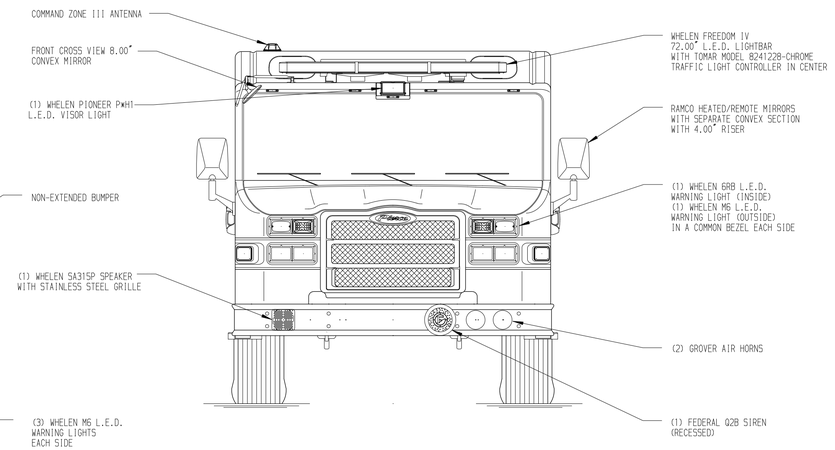

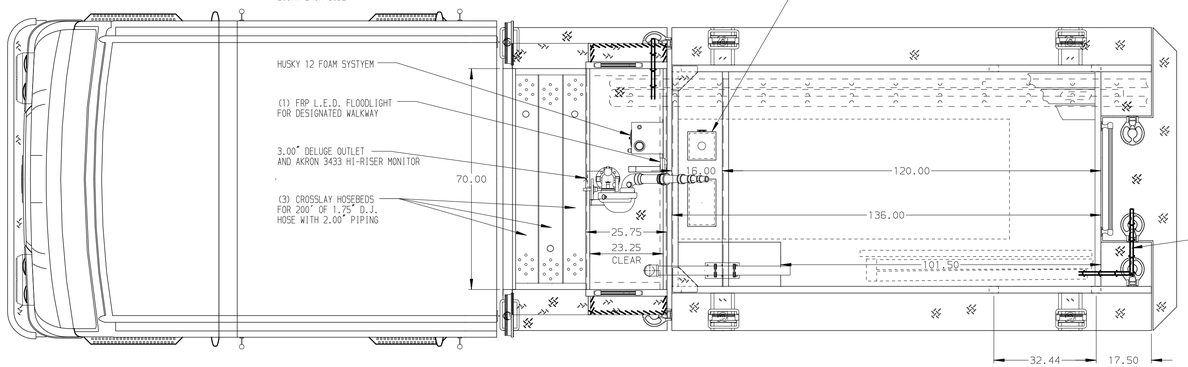

HOSEBED CAPACITIES

1 - 300' OF 2.50" DJ HOSE
2 - 300' OF 2.50" DJ HOSE
3 - 800' OF 5.00" DJ HOSE
4 - 300' OF 1.75" DJ HOSE

SURFACE DESIGNATION AND
PATHWAY MARKINGS

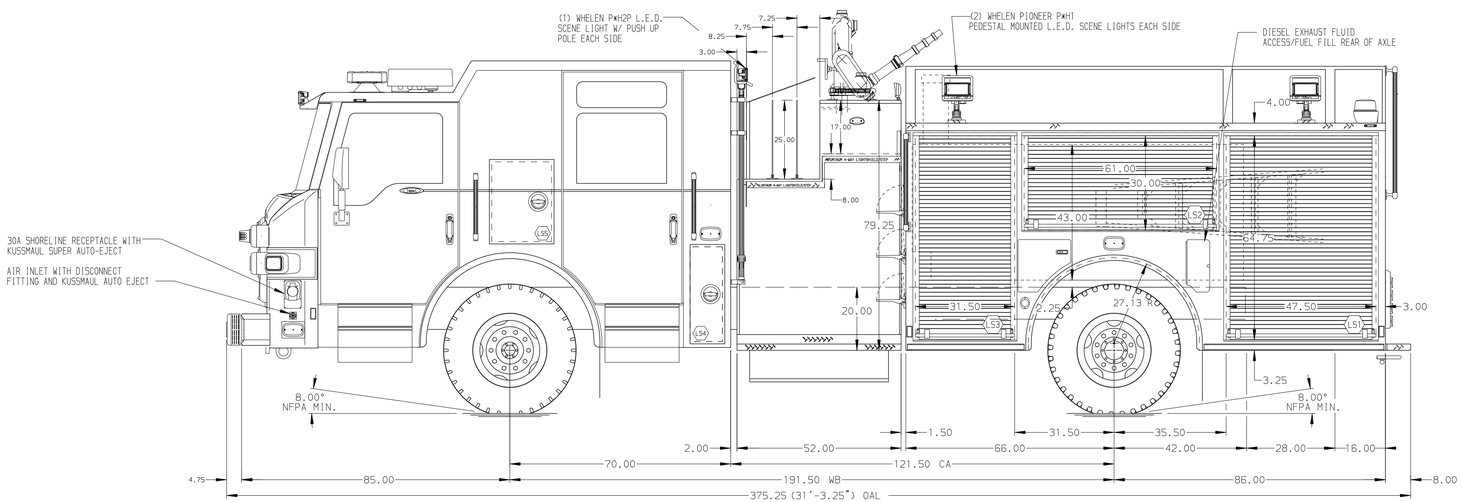

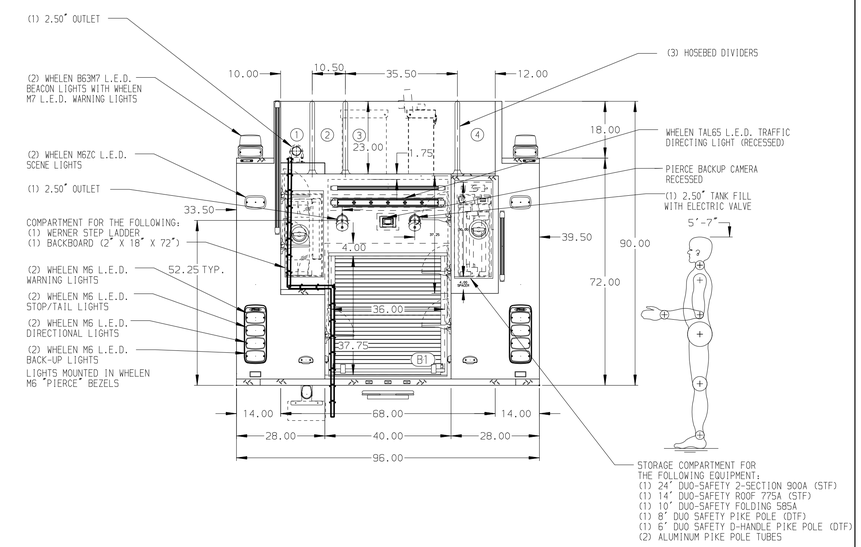

STAINLESS STEEL BODY

SIDE ROLL AND FRONTAL IMPACT PROTECTION

NOTE

DIMENSIONS SHOWN ARE APPROXIMATE AND ARE SUBJECT TO MINOR DEVIATIONS AS MAY OCCUR OR BE NECESSARY IN CONSTRUCTION.
MINOR DETAILS NOT SHOWN.

1. INSTA CHAIN AUTOMATIC TIRE CHAINS TO BE PROVIDED AT REAR
2. TWO PROGRESSIVE DYNAMICS MODEL PD2180 BATTERY CHARGER/CONVERTERS LOCATED IN LS3
3. ONE FULL WIDTH/DEPTH ADJUSTABLE SHELF IN COMPARTMENT RS2 TWO IN RS1, RS3, & LS3 AND THREE IN LS1
4. SWING-OUT TOOL BOARD WITH PAC TRAC IN COMPARTMENT LS2
5. TWO WORDEN HWG-SB SUPER GRIPPER WHEEL CHOCKS SHIPPED LOOSE
6. ONE ADJUSTABLE SHELF LOCATED IN COMPARTMENT LS4 & RS4
7. SCUFFPLATES LOCATED AT CAB DOOR JAMBS AND CAB HANDRAILS
8. ONE FLOOR MOUNTED SLIDE-OUT TRAY IN LS1
9. ONE 120V NEMA DUPLEX RECEPTACLE BEHIND THE DRIVER'S SEAT NEXT TO THE ENGINE TUNNEL AND ONE IN THE FORWARD FACING EMS CABINET
10. ONE FLOOR MOUNTED SLIDE MASTER SLIDE-OUT TRAY IN B1

REV	DATE	BY	CH
1	01OCT20	LST	JGO
2	02SEP20	LST	JGO
3	26JUN20	LST	KOU

CHASSIS DATA
MAKE: PIERCE
MODEL: IMPEL FR

Pierce MANUFACTURING INC.

TITLE: 1500-D-640P, 600 GAL WATER W/40 GAL FOAM, 152" BODY (3)XLAYS, LADDERS THRU BODY, DELUGE, HUSKY 12

FOR: ROCHESTER FIRE DEPARTMENT
ROCHESTER, MINNESOTA

DWG NO.: 35106AD

JOB NO.	35106
SCALE	1:24
DATE	
DRAWN BY	LST 15JUN20
CHECKED BY	NPA 23JUN20
SHEET SIZE	D
SHEET NO.	1 OF 1

View File Created 05-OCT-2020 06:46:56