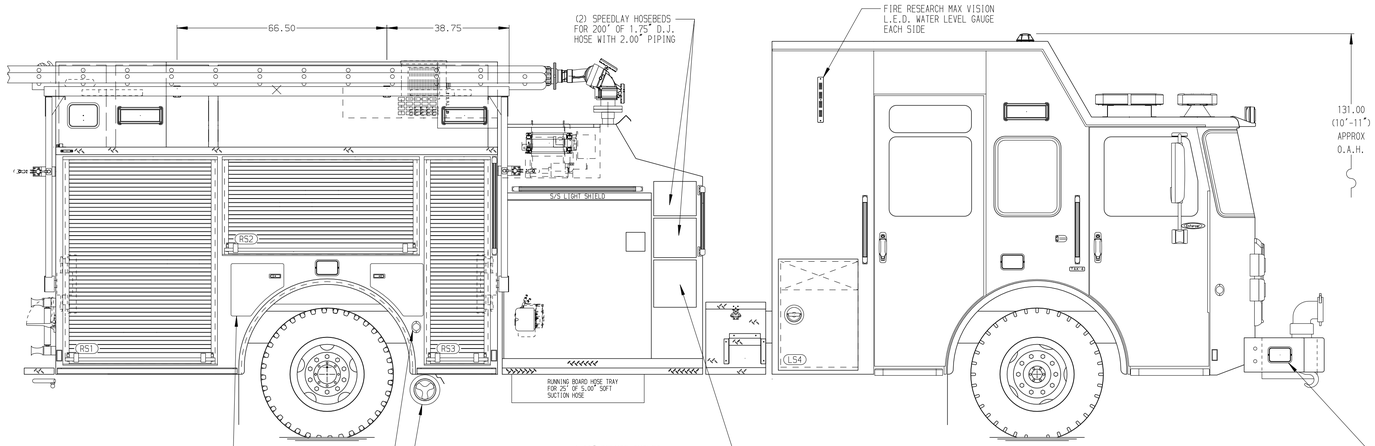

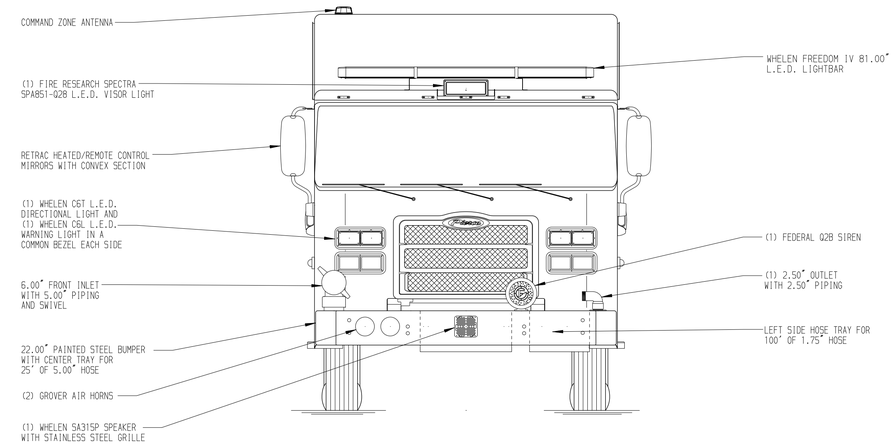

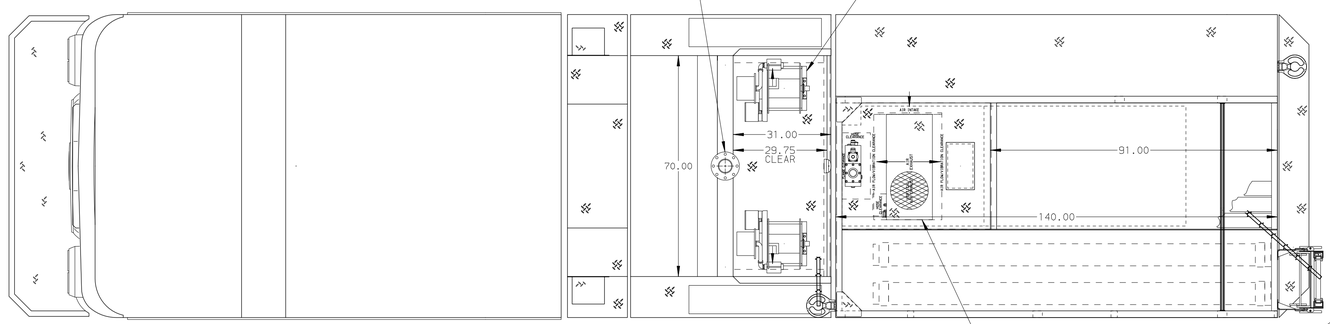

HOSEBED CAPACITIES

1. 500' OF 3.00" D.J.POLY HOSE
2. 1200' OF 5.00" D.J.POLY HOSE

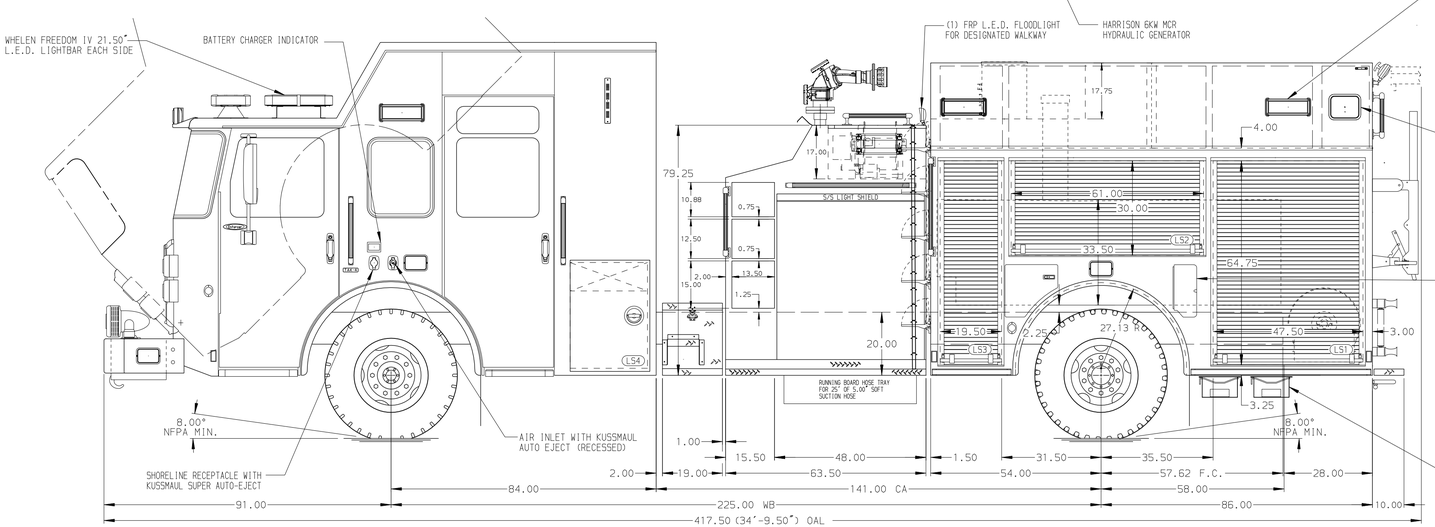

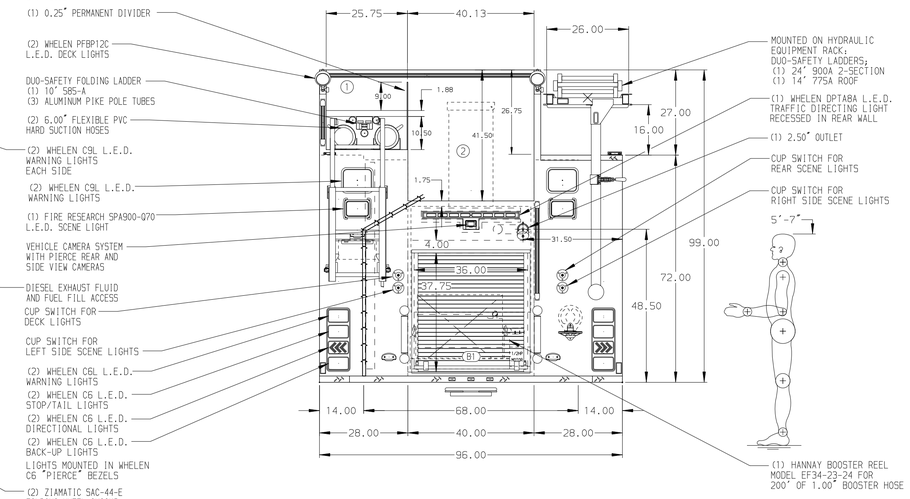

ALUMINUM BODY

MAXIMUM O.A.L. 417.50"

MAXIMUM O.A.H. 132.00"

NOTE

DIMENSIONS SHOWN ARE APPROXIMATE AND ARE SUBJECT TO MINOR DEVIATIONS AS MAY OCCUR OR BE NECESSARY IN CONSTRUCTION.
MINOR DETAILS NOT SHOWN.

1. BATTERY CHARGER LOCATED BEHIND THE DRIVER SEAT
2. DRIP PAN GUARD FOR ROLL-UP DOOR LOCATED IN ALL COMPARTMENTS
3. TWO FULL WIDTH/DEPTH ADJUSTABLE SHELVES LOCATED IN COMPARTMENTS PER ORDER
4. ONE ADJUSTABLE SLIDE-OUT TRAY LOCATED IN COMPARTMENTS PER ORDER
5. ONE FLOOR MOUNTED SLIDE-OUT TRAY LOCATED IN COMPARTMENTS PER ORDER
6. SLIDE-OUT TOOL BOARD WITH PEGBOARD PATTERN IN COMPARTMENT LS1,TWO IN LS2
7. ONE VERTICAL DIVIDER IN COMPARTMENT LS1
8. CIRCUIT BREAKER PANEL IN COMPARTMENT LS3

REV	DATE	BY	CH
5	14DEC20	JWO	DTS
4	30OCT20	JWO	DTS
3	25AUG20	CDU	AZA

CHASSIS DATA	
MAKE	PIERCE
MODEL	ENFORCER
TITLE	2000-D-500, 140" BODY, TOP MOUNT, SPEEDLAYS DELUGE, HYDRAULIC LADDER RACK, GENERATOR
FOR	ABERDEEN FIRE DISTRICT #2 ABERDEEN, NEW JERSEY
DWG NO.	35202AD

Pierce MANUFACTURING INC.

JOB NO.	35202
SCALE	1:24
DATE	
DRAWN BY	JWO
	21AUG20
CHECKED BY	CDU
	21AUG20
SHEET SIZE	D
SHEET NO.	1 OF 1

View File Created 14-DEC-2020 08:35:30