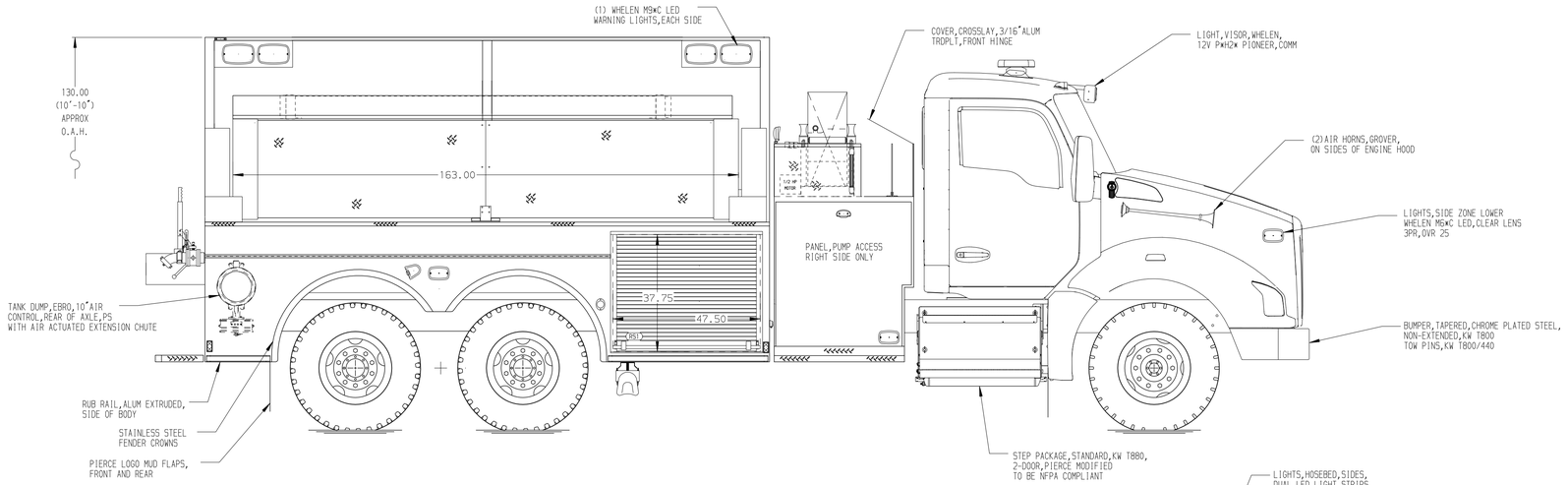

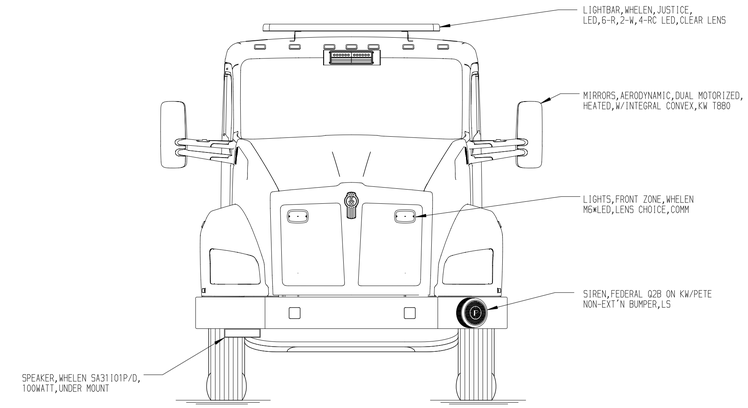

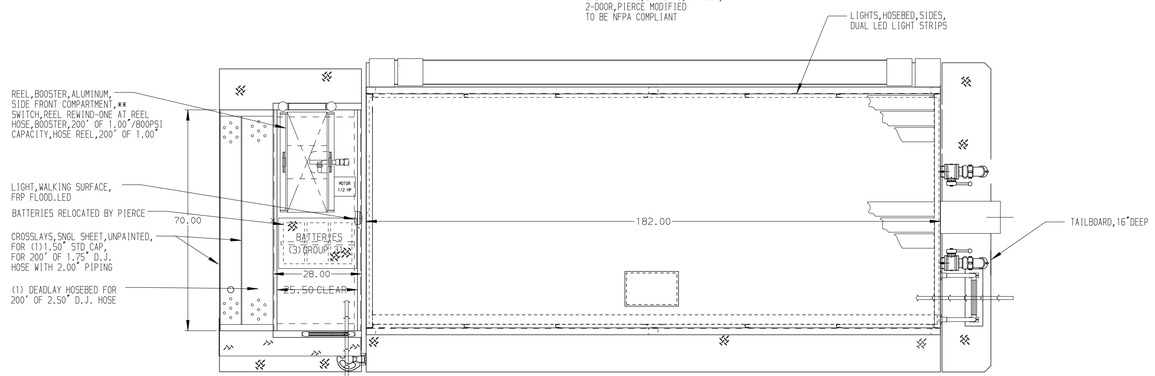

HOSEBED CAPACITIES

1. 600' OF 3.00" DJ HOSE
2. 200' OF 5.00" LDH HOSE

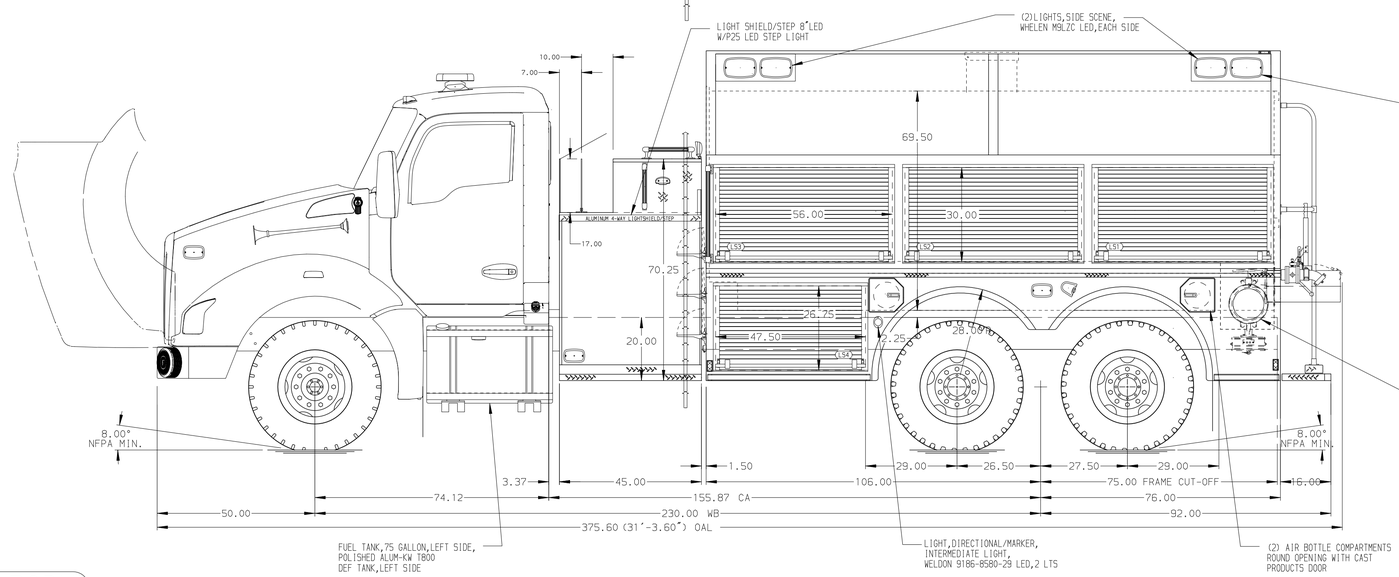

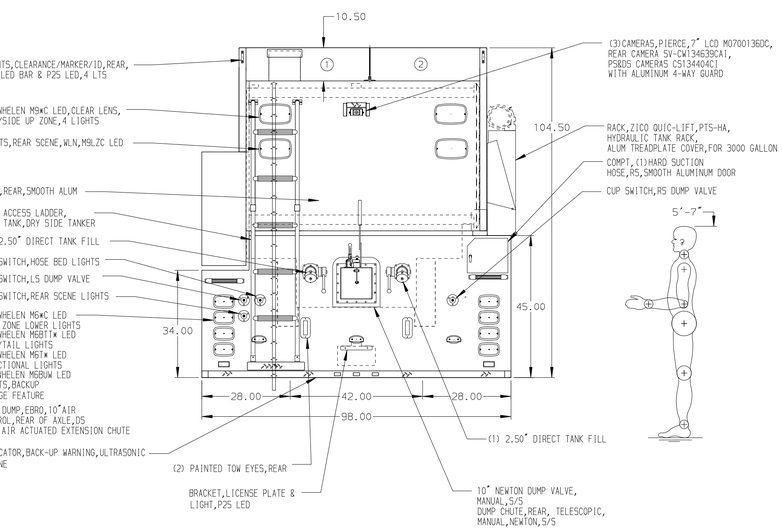

ALUMINUM BODY

NOTE

DIMENSIONS SHOWN ARE APPROXIMATE AND ARE SUBJECT TO MINOR DEVIATIONS AS MAY OCCUR OR BE NECESSARY IN CONSTRUCTION.
MINOR DETAILS NOT SHOWN.

REV	DATE	BY	CH
7	11JAN21	RHU	CAG
6	06NOV20	RHU	CAG

CHASSIS DATA
MAKE: KENWORTH
MODEL: T880

Pierce MANUFACTURING INC.
BRADENTON, FLORIDA

TITLE: 1000-D-3000 POLY,182"HIGHSIDE DRYSIDE BODY W/DUMPS 45"SIDE CONTROL,(2)1.5"CROSSLAYS,(1)DEADLAY
FOR: CLAY COUNTY FIRE RESCUE GREEN COVE SPRINGS, FLORIDA
DWG NO.: 35205AD

JOB NO.	SCALE	DRAWN BY	CHECKED BY	SHEET SIZE	SHEET NO.
35205	1:24	JLA	RWI	D	1 OF 1
	DATE	03AUG20	04AUG20		

View File Created 14-JAN-2021 13:41:22