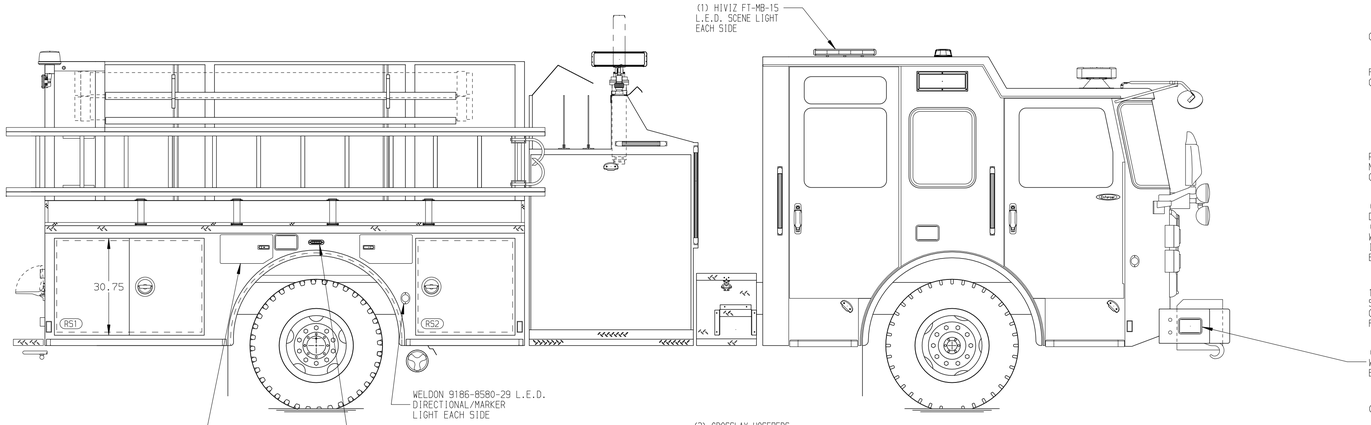

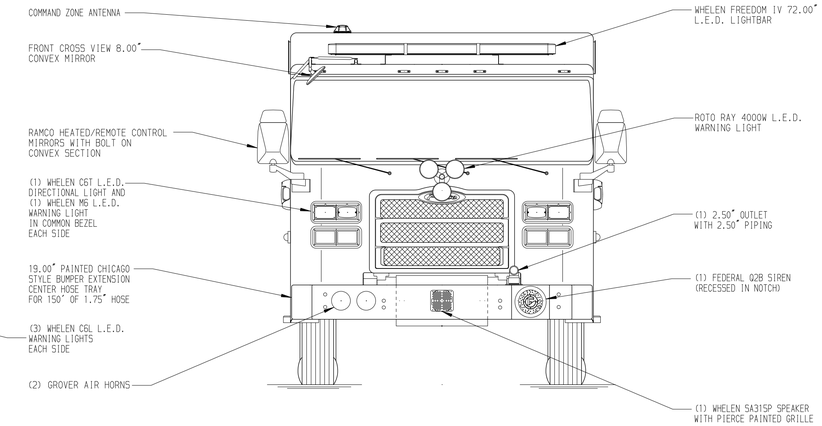

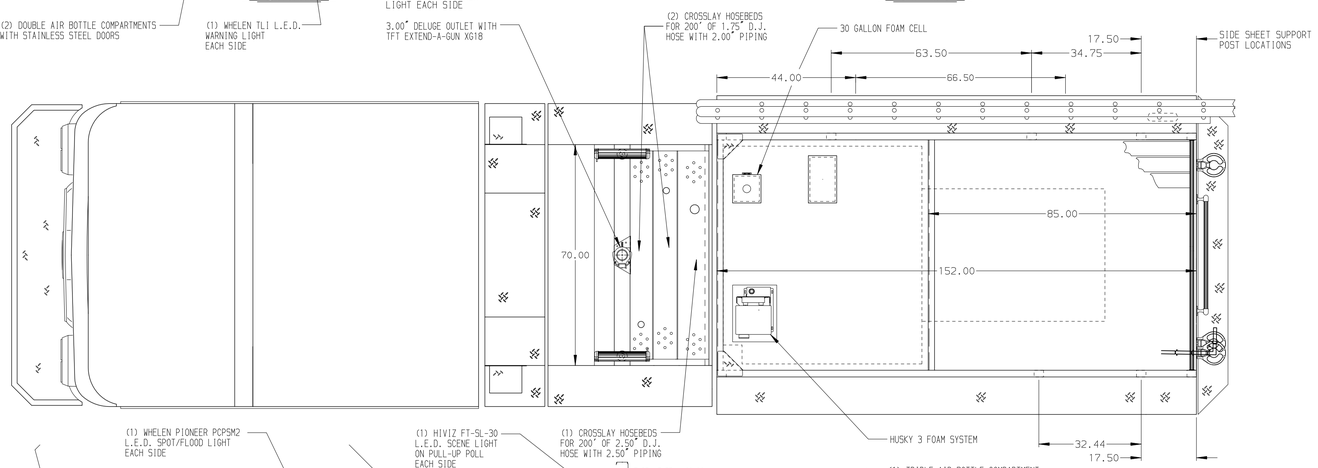

HOSEBED CAPACITIES
1. 400' OF 2.00" D.J. POLY HOSE
2. 800' OF 3.00" D.J. POLY HOSE
3. 800' OF 5.00" D.J. POLY HOSE
4. 400' OF 2.50" D.J. POLY HOSE

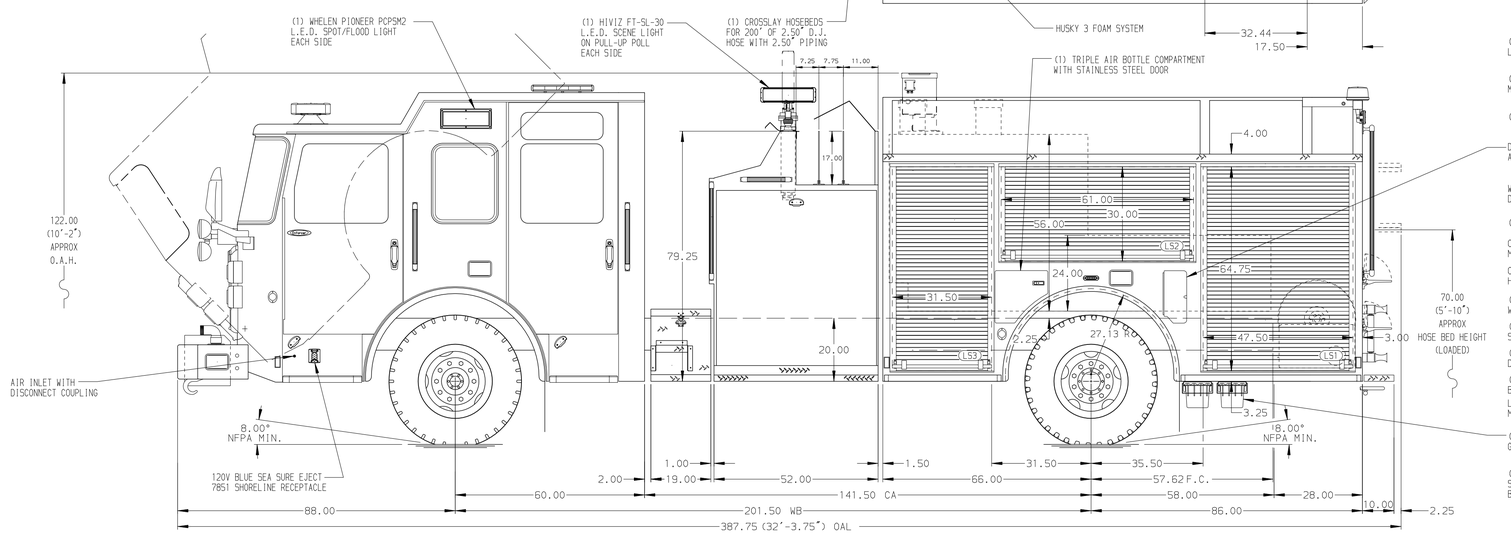

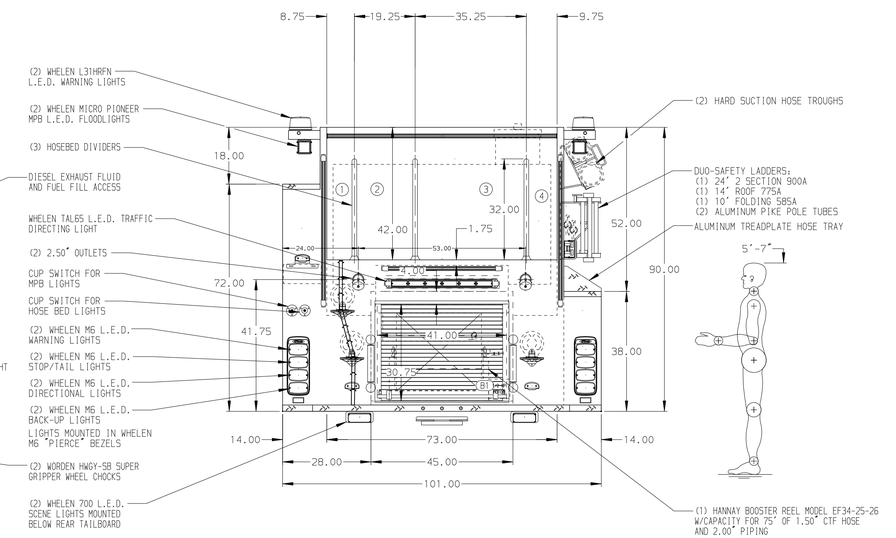

ALUMINUM BODY

MAXIMUM O.A.H. 122.00"

MAXIMUM O.A.L. 387.75"

Pierce MANUFACTURING INC.

NOTE

DIMENSIONS SHOWN ARE APPROXIMATE AND ARE SUBJECT TO MINOR DEVIATIONS AS MAY OCCUR OR BE NECESSARY IN CONSTRUCTION.
MINOR DETAILS NOT SHOWN.

1. BATTERY CHARGER LOCATED BEHIND THE DRIVER SEAT
2. DUAL L.E.D. LIGHT STRIPS LOCATED IN HOSE BED
3. DRIP PAN GUARD FOR ROLL-UP DOOR LOCATED LS1,LS2,LS3,B1
4. ONE FULL WIDTH/DEPTH ADJUSTABLE SHELF IN COMPARTMENT LS1,LS3
5. ONE FLOOR MOUNTED SLIDE-OUT TRAY IN COMPARTMENT LS1,RS1
6. SWING-OUT TOOL BOARD WITH PEGBOARD PATTERN IN COMPARTMENT LS2

REV	DATE	BY	CH
B	18JAN21	JWO	DTS
A	02DEC20	JWO	DTS

CHASSIS DATA
MAKE: PIERCE
MODEL: ENFORCER

TITLE: 2000-D-970P W/30G FOAM,152",FULL HEIGHT LS,LOW RS (3) X-LAYS,DELUGE

FOR: COOL BRANCH VOLUNTEER FIRE DEPARTMENT
PENHOOK, VIRGINIA

DWG NO. 35229AD

JOB NO.	35229
SCALE	1:24
DATE	
DRAWN BY	JWO
	25AUG20
CHECKED BY	KOU
	27AUG20
SHEET SIZE	D
SHEET NO.	1 OF 1

View File Created 02-FEB-2021 15:05:24