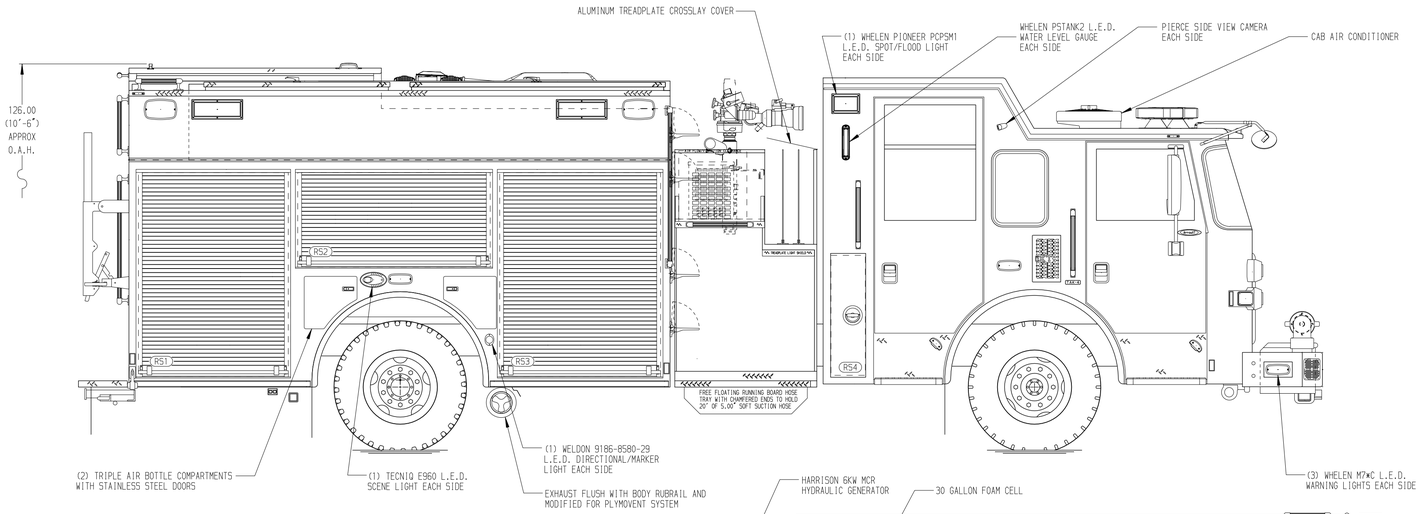

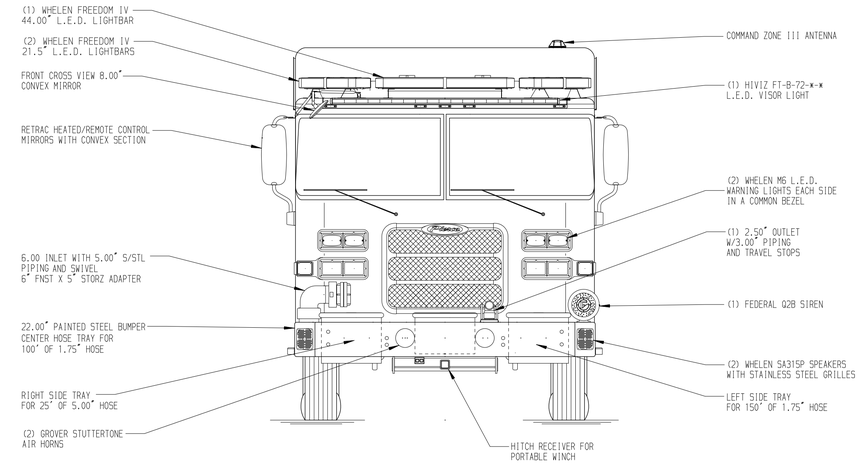

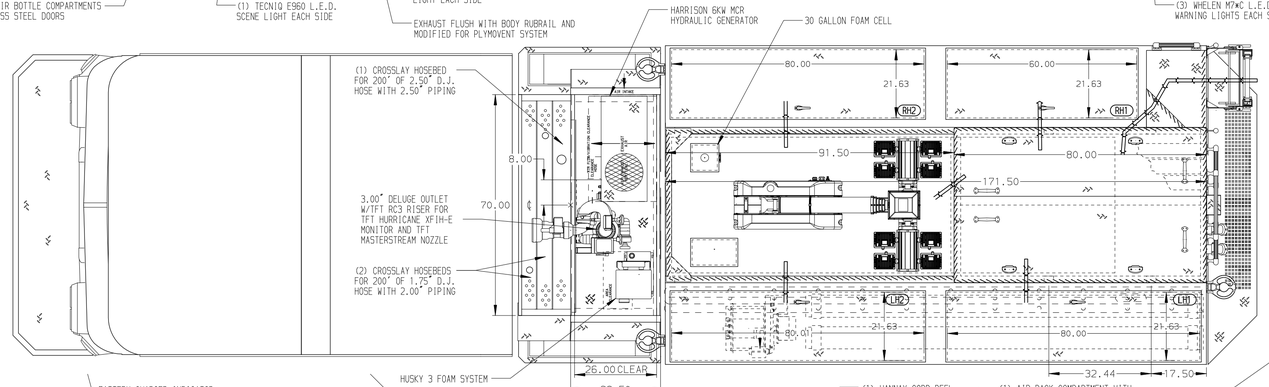

HOSEBED CAPACITIES

1. 400' OF 2.50" D.J. POLY HOSE
2. 600' OF 3.00" D.J. POLY HOSE
3. 1200' OF 5.00" NEIDNER XLB00 HOSE

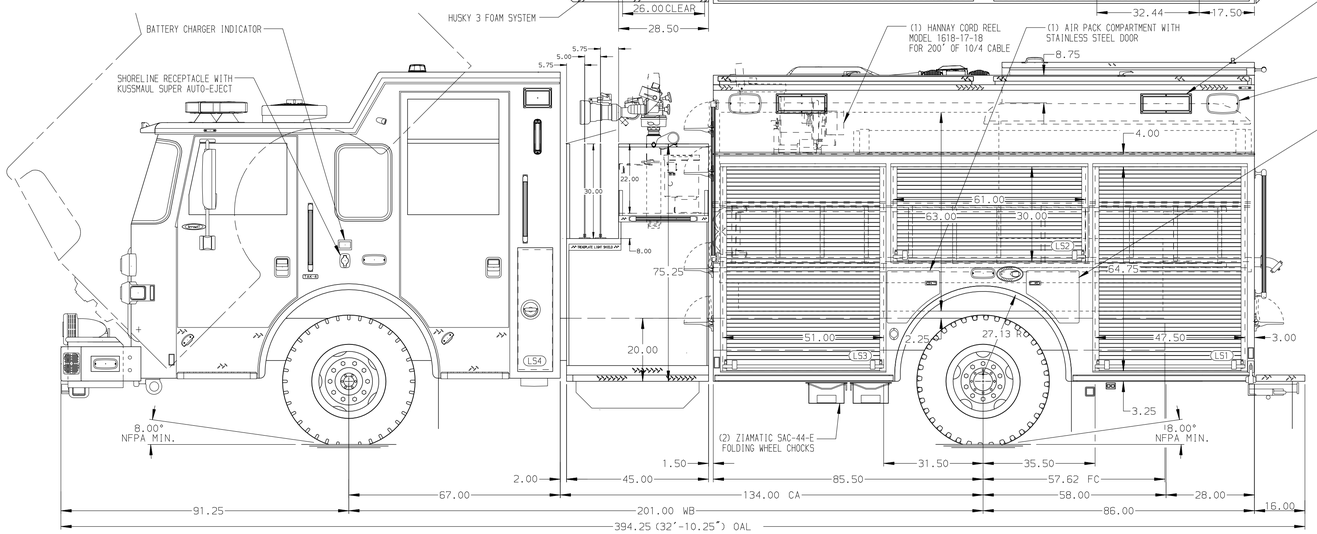

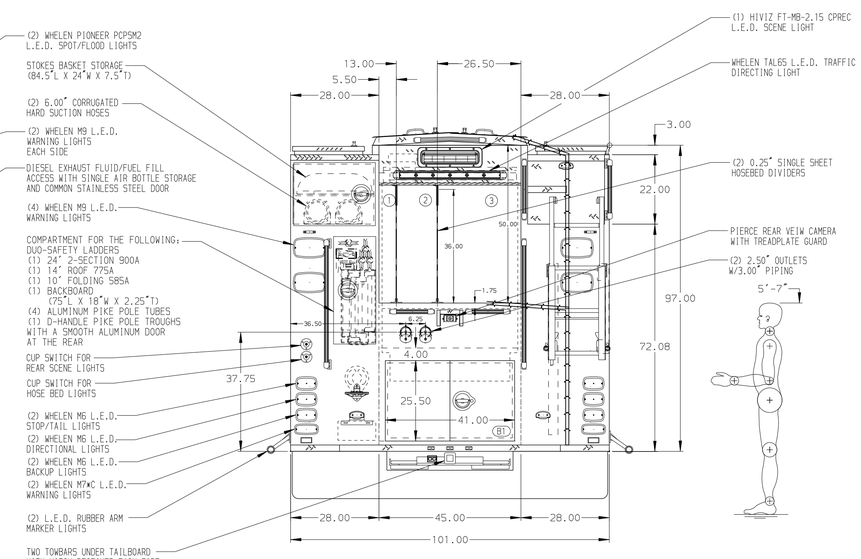

ALUMINUM BODY

SIDE ROLL AND FRONTAL IMPACT PROTECTION

NOTE

DIMENSIONS SHOWN ARE APPROXIMATE AND ARE SUBJECT TO MINOR DEVIATIONS AS MAY OCCUR OR BE NECESSARY IN CONSTRUCTION.
MINOR DETAILS NOT SHOWN.

1. KUSSMAUL AIR COMPRESSOR LOCATED BEHIND DRIVER'S SEAT
2. BATTERY CHARGER LOCATED BEHIND DRIVER'S SEAT
3. DUAL L.E.D. LIGHT STRIPS LOCATED BELOW HOSE BED COVER
4. DRIP PAN GUARD FOR ROLL-UP DOOR LOCATED IN COMPARTMENTS LS1,LS2,LS3,RS1,RS2,RS3
5. ONE FULL WIDTH/DEPTH ADJUSTABLE SHELF IN COMPARTMENT LS2,RS3,TWO IN LS1
6. CABLE RELEASE LATCH WITH SINGLE HAND OPERATION FOR TRAY IN COMPARTMENT RS1,RS3
7. ONE ADJUSTABLE TILTING SLIDE-OUT TRAY IN COMPARTMENT RS1,RS3
8. ONE FLOOR MOUNTED SLIDE-OUT TRAY WITH 2.00" SIDES IN COMPARTMENT RS1,RS3,B1
9. ONE FULL WIDTH/DEPTH FLOOR MOUNTED SLIDE-OUT TRAY IN COMPARTMENT LS3
10. ONE 3/8" MOUNTING PLATE LOCATED IN COMPARTMENT RS1,B1
11. SWING-OUT TOOL BOARD WITH PEGBOARD PATTERN IN COMPARTMENT RS2
12. PARTITION BETWEEN COMPARTMENTS LS1/B1 AND RS1/B1
13. ALUMINUM PEGBOARD ON BACK WALL COMPARTMENTS LS1,LS3,RS2
14. CIRCUIT BREAKER PANEL IN COMPARTMENT LS3
15. AIR OUTLET WITH SHUT OFF VALVE ON LEFT SIDE PUMP PANEL
16. ELASTIC PULL STRAP FOR DOOR LOCATED IN COMPARTMENTS LS1,LS2,LS3,RS1,RS2,RS3
17. LITTLE GIANT LADDER STORAGE LOCATED IN COMPARTMENT RS1
18. STORAGE BIN FOR FOUR AIR BOTTLES LOCATED IN COMPARMTENT B1

REV	DATE	BY	CH
3	03MAR21	JWO	AZA
2	22JAN21	JWO	AZA
1	05NOV20	JWO	CWI
0	04SEP20	KLE	KOU

CHASSIS DATA
MAKE: PIERCE
MODEL: ARROW XT

Pierce MANUFACTURING INC.

TITLE: 2000-D-1000 WATER/30 FOAM, 171" BODY, SIDE CONTROL CROSSLAYS, LADDERS THRU BODY, FOAM SYSTEM
FOR: FRANKLIN TOWNSHIP, FIRE DISTRICT #1 SOMERSET, NEW JERSEY
DWG NO.: 35264AD

JOB NO.	35264
SCALE	1:24
DATE	
DRAWN BY	JWO 27AUG20
CHECKED BY	AZA 2SEP20
SHEET SIZE	D
SHEET NO.	1 OF 1

View File Created 03-MAR-2021 14:17:40