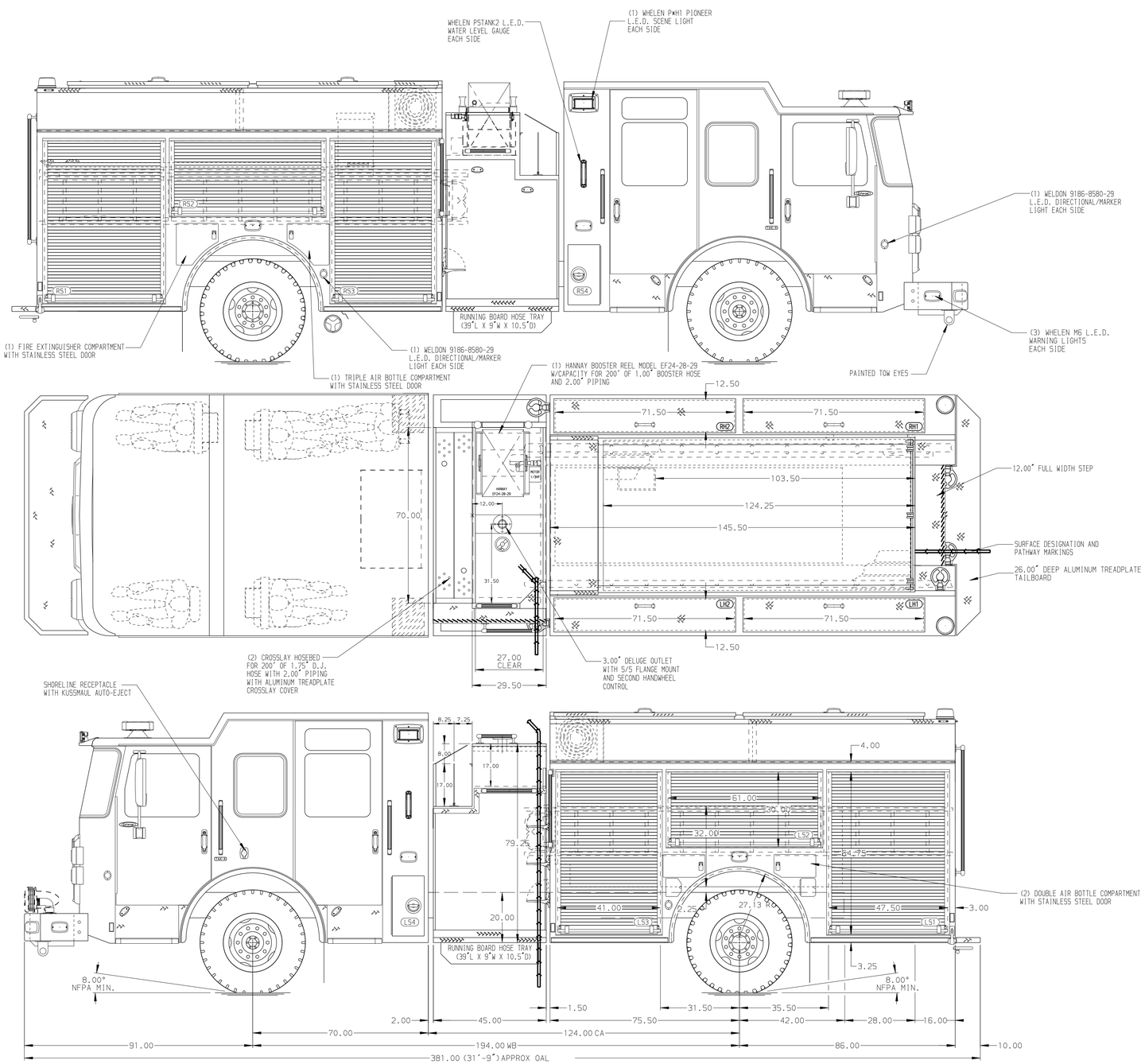

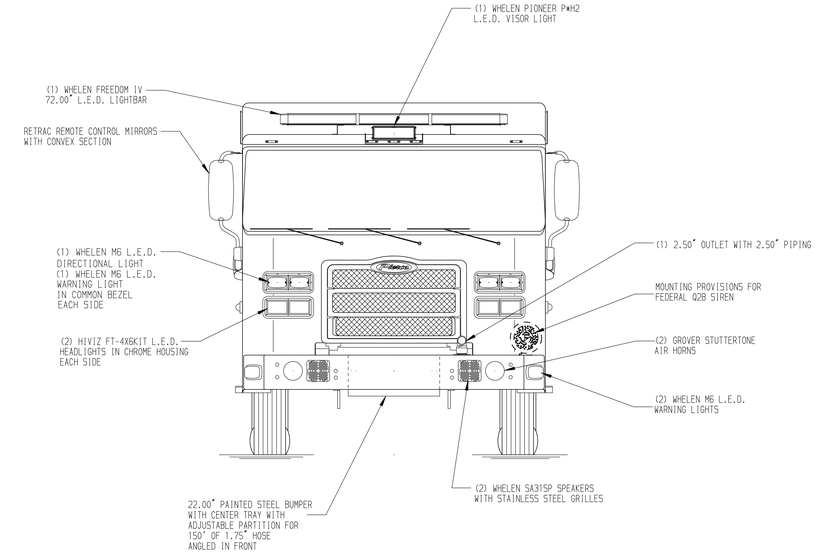

HOSEBED CAPACITIES

1. - 300' OF 2.50" DJP
2. - 1000' OF 5.00" DJP
3. - 800' OF 2.50" DJP
4. - 200' OF 1.75" DJP

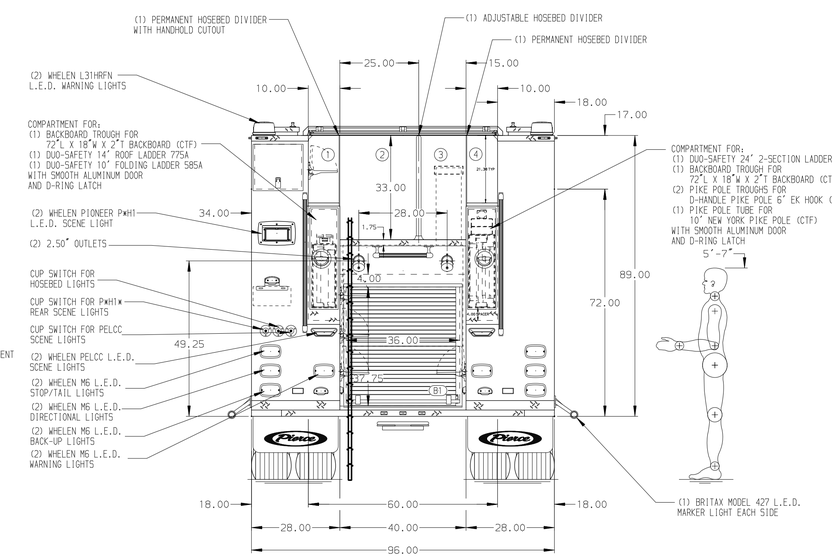

ALUMINUM BODY

NOTE

DIMENSIONS SHOWN ARE APPROXIMATE AND ARE SUBJECT TO MINOR DEVIATIONS AS MAY OCCUR OR BE NECESSARY IN CONSTRUCTION.
MINOR DETAILS NOT SHOWN.

1. DUAL L.E.D. LIGHT STRIPS LOCATED IN HOSE BED

REV	DATE	BY	CH
V	24NOV20	SAM	JJR
B	050CT20	SAM	JJR
V	01SEP20	SAM	JJR

CHASSIS DATA
MAKE: PIERCE
MODEL: ENFORCER

Pierce MANUFACTURING INC.

TITLE: 1750-D-500P, 500 GAL WATER TANK, 161" FH FDLER BODY (2) LADDER STORAGE BTWN TANK & SS, (2) CROSSLAYS
FOR: JACKSONVILLE FIRE AND RESCUE, JACKSONVILLE, FLORIDA
DWG NO.: 35324AD-SH1

JOB NO.	35324 1 OF 3
SCALE	1:24
DATE	
DRAWN BY	SAM 25AUG20
CHECKED BY	JJR 26AUG20
SHEET SIZE	D
SHEET NO.	1 OF 2

View File Created 01-DEC-2020 13:41:06