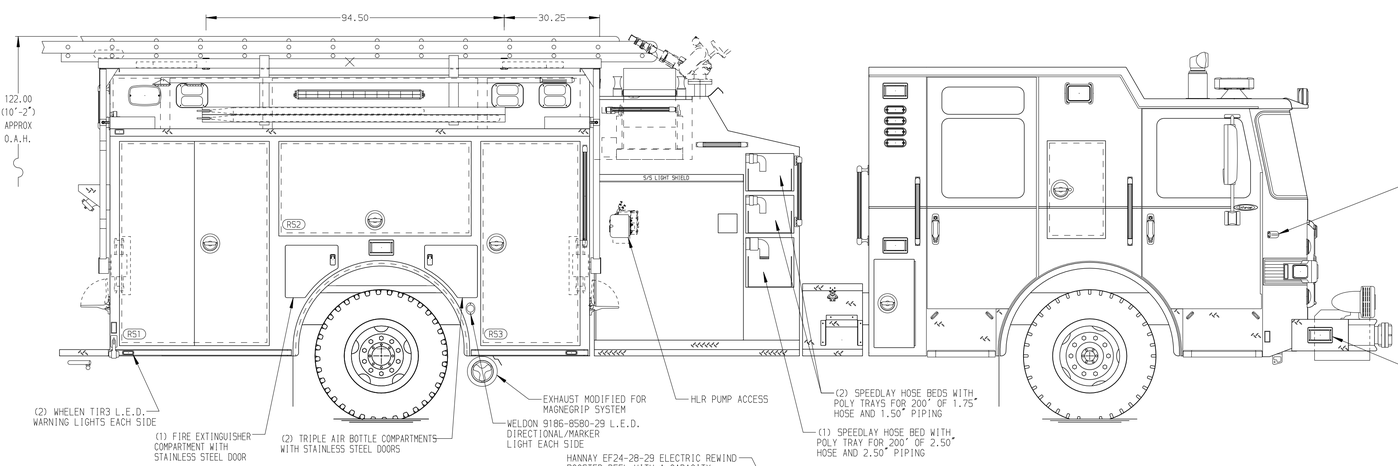

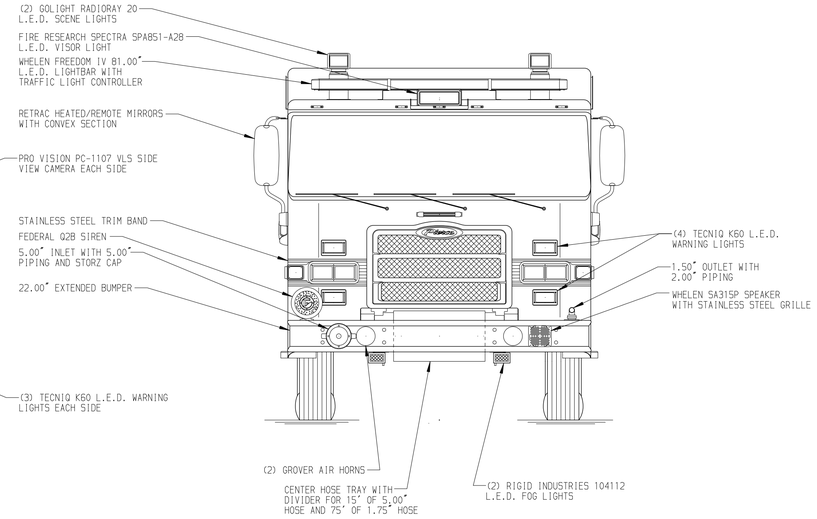

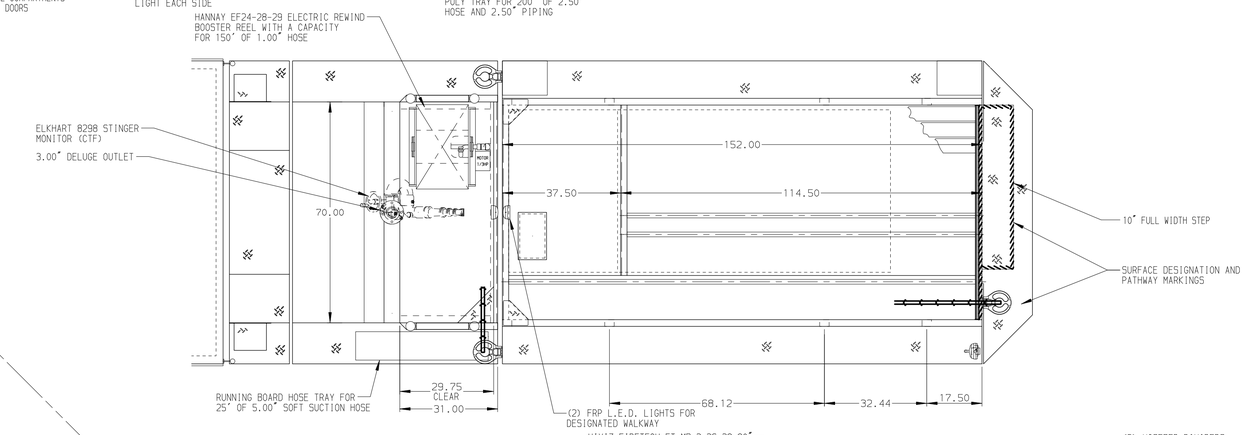

HOSEBED CAPACITIES

1. 400' OF 3.00" D.J.POLY HOSE
2. 400' OF 3.00" D.J.POLY HOSE
3. 150' OF 1.75" D.J.POLY HOSE
4. 1000' OF 5.00" D.J.POLY HOSE

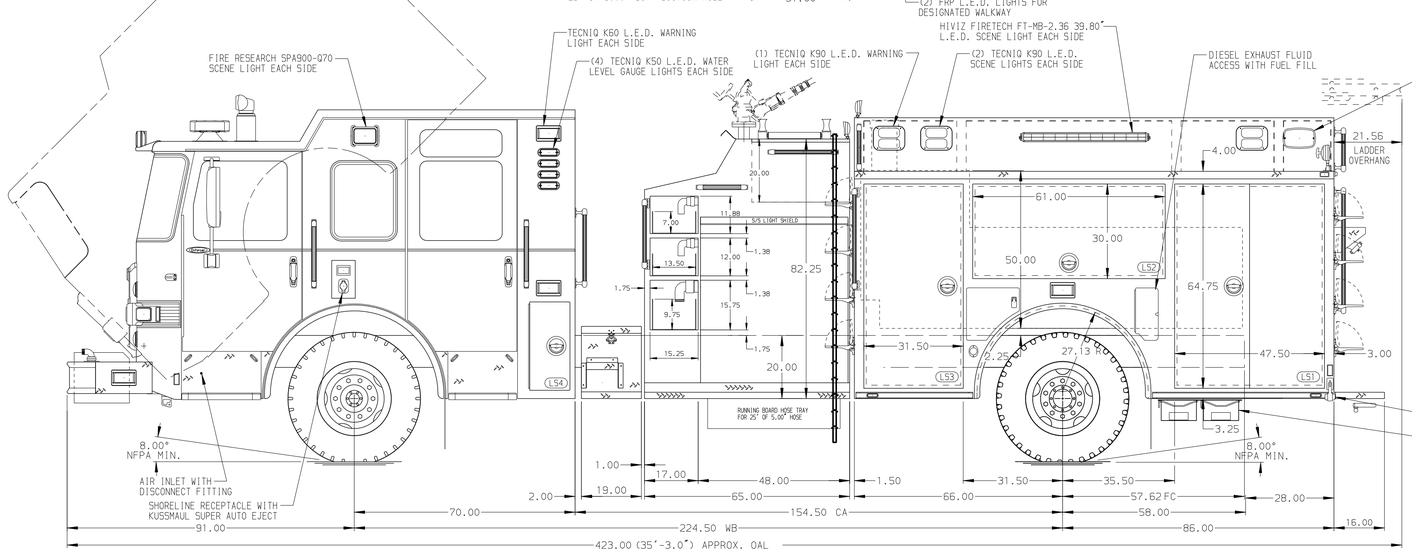

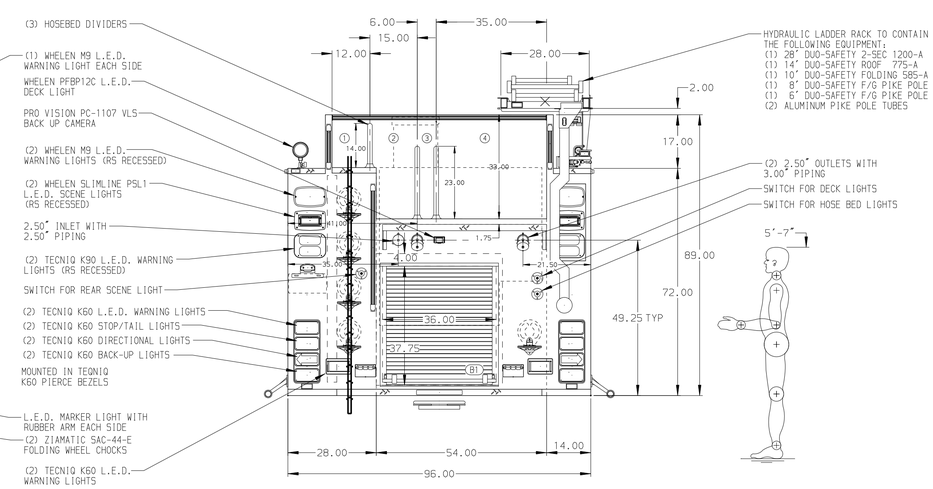

ALUMINUM BODY | SIDE ROLL & FRONTAL IMPACT PROTECTION

NOTE

DIMENSIONS SHOWN ARE APPROXIMATE AND ARE SUBJECT TO MINOR DEVIATIONS AS MAY OCCUR OR BE NECESSARY IN CONSTRUCTION.
MINOR DETAILS NOT SHOWN.

1. ALUMINUM TREADPLATE ON CAB ROOF
2. BATTERY CHARGER LOCATED BEHIND DRIVER'S SEAT
3. ONE VERTICAL PARTITION LOCATED IN COMPARTMENT LS1
4. PULL STRAPS FOR DOORS IN COMPARTMENT LS2 AND RS2
5. EIGHT FULL WIDTH/DEPTH ADJUSTABLE SHELVES - ONE IN COMPARTMENT RS2; TWO IN LS3 AND RS1; THREE IN RS3
6. FIVE ALUMINUM SLIDE-OUT TOOLBOARDS WITH PEG BOARD IN COMPARTMENT LS1
7. PAC TRAC MOUNTED ON COMPARTMENT WALLS OF RS2
8. PARTITION BETWEEN COMPARTMENTS LS1/B1 AND RS1/B1
9. MICROPHONE AND SPEAKER COMPARTMENT LOCATED AT THE PUMP OPERATORS PANEL
10. ONE ADJUSTABLE TILT/SLIDE-OUT TRAY IN COMPARTMENT LS2
11. VOGEL LUBE SYSTEM IN PUMP HOUSE

REV	DATE	BY	CH
7	16DEC20	LME	DTS
6	04DEC20	LME	GKH
5	03DEC20	LME	GKH
4	18NOV20	JRO	DTS
3	18SEP20	SAM	WKL

CHASSIS DATA
MAKE: PIERCE
MODEL: ENFORCER

Pierce MANUFACTURING INC.

TITLE: 1500-D-750P,152 PUMPER BODY,DELUGE,GENERATOR HYDRAULIC LADDER RACK,(3) SPEEDLAYS
FOR: PIKE TOWNSHIP FIRE DEPARTMENT INDIANAPOLIS, IN
DWG NO.: 35354AD

JOB NO.	35354
SCALE	1:24
DATE	
DRAWN BY	LME 09SEP20
CHECKED BY	EGO 11SEP20
SHEET SIZE	D
SHEET NO.	1 OF 1

View File Created 16-DEC-2020 14:10:06