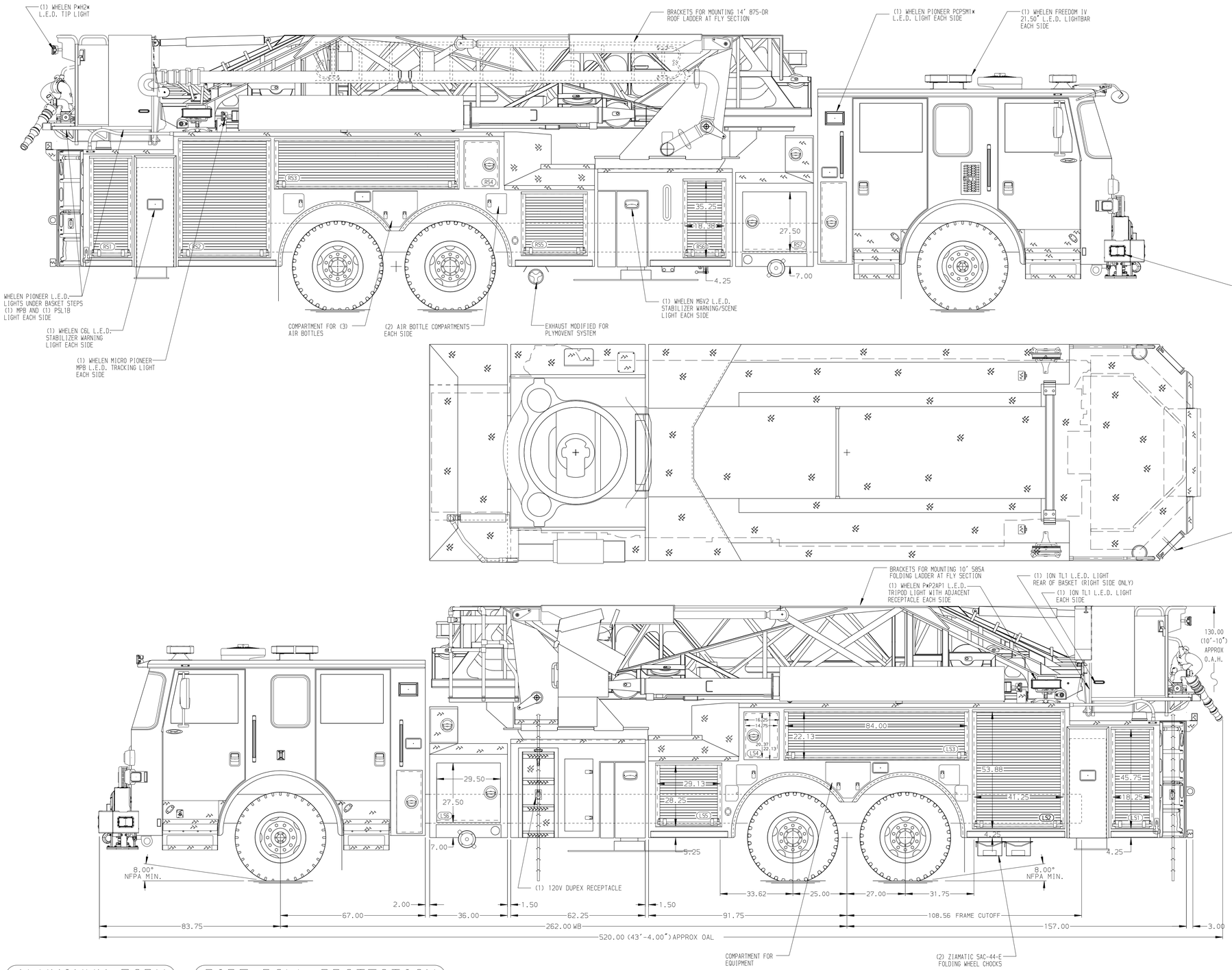

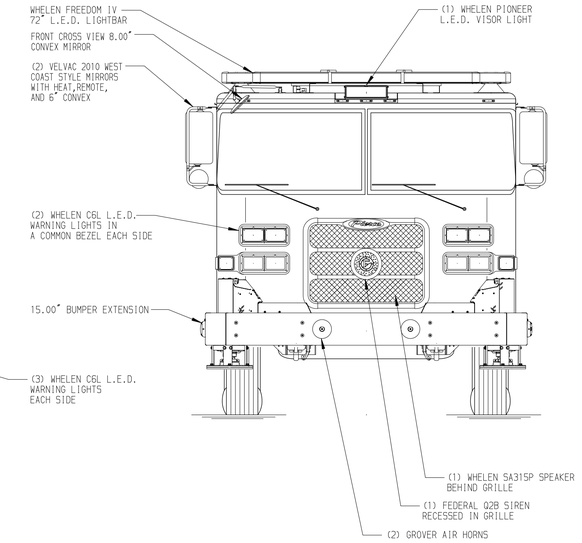

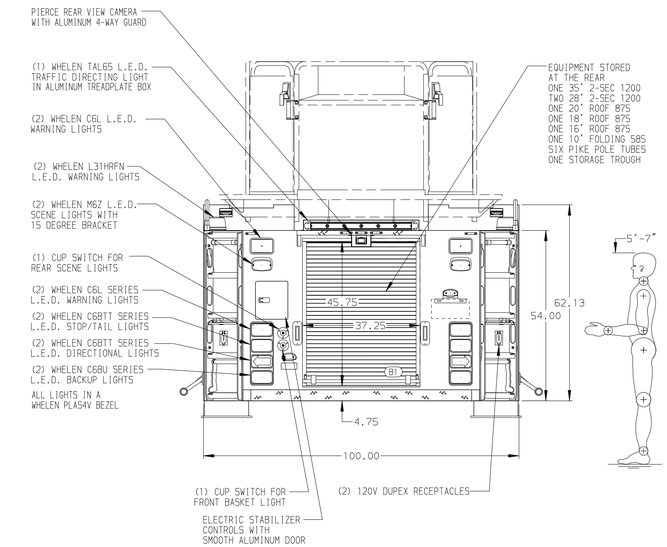

ALUMINUM BODY

SIDE ROLL PROTECTION

NOTE

DIMENSIONS SHOWN ARE APPROXIMATE AND ARE SUBJECT TO MINOR DEVIATIONS AS MAY OCCUR OR BE NECESSARY IN CONSTRUCTION.
MINOR DETAILS NOT SHOWN.

1. SHORELINE RECEPTACLE WITH BLUE SEA AUTO-EJECT LOCATED ON DRIVER SIDE OF THE CAB
2. AIR INLET WITH DISCONNECT COUPLING RECESSED WITH 4-WAY COVER IN THE DRIVER SIDE STEPWELL
3. BATTERY CHARGER LOCATED BEHIND DRIVER'S SEAT
4. BATTERY CHARGE INDICATOR LOCATED NEAR DRIVER SEAT RISER WITH BRACKET
5. CIRCUIT BREAKER PANEL IN COMPARTMENT PER SHOP ORDER
6. NON-RAISED AERIAL PEDESTAL
7. 3-in-1 LYFECOMBO BRACKETS AT AERIAL BASKET
8. 2-WAY INTERCOM SYSTEM BETWEEN AERIAL TIP AND TURNTABLE
9. 120/240V TO TIP
10. HOSE STORAGE BOX ON RIGHT SIDE OF BASKET FOR 100' OF 1.75" D.J. POLY HOSE
11. SEVEN ADJUSTABLE FULL WIDTH/FULL DEPTH SHELVES IN COMPARTMENTS PER SHOP ORDER
12. ONE ADJUSTABLE SLIDE-OUT TRAY LOCATED PER SHOP ORDER
13. TWO TILT SLIDE-OUT TRAYS LOCATED PER SHOP ORDER
14. TWO FLOOR MOUNTED TRAYS LOCATED PER SHOP ORDER
15. TWO SPECIAL VERTICAL PARTITIONS LOCATED PER SHOP ORDER
16. TWO FLOOR EXTENSIONS IN COMPARTMENTS PER SHOP ORDER
17. ONE 120V 6-PLACE RECEPTACLE STRIP LOCATED IN CAB PER SHOP ORDER
18. TWO 120V RECEPTACLES LOCATED IN COMPARTMENT PER SHOP ORDER

REV	DATE	BY	CH
7	29JAN21	JGA	DTS
6	18DEC20	JGA	DTS
5	02OCT20	JGA	NDA

CHASSIS DATA
MAKE: PIERCE
MODEL: ARROW XT

Pierce MANUFACTURING INC.

TITLE: 100' ASCENDANT AERIAL TOWER AND BODY ASSEMBLY NO PUMP, NO TANK
FOR: CHARLESTON FIRE DEPARTMENT CHARLESTON, SC
DWG NO.: 35392AD

JOB NO.	35392
SCALE	1:24
DATE	
DRAWN BY	JGA
	29SEP20
CHECKED BY	CRI
	30SEP20
SHEET SIZE	D
SHEET NO.	1 OF 1

View File Created 01-FEB-2021 08:12:07