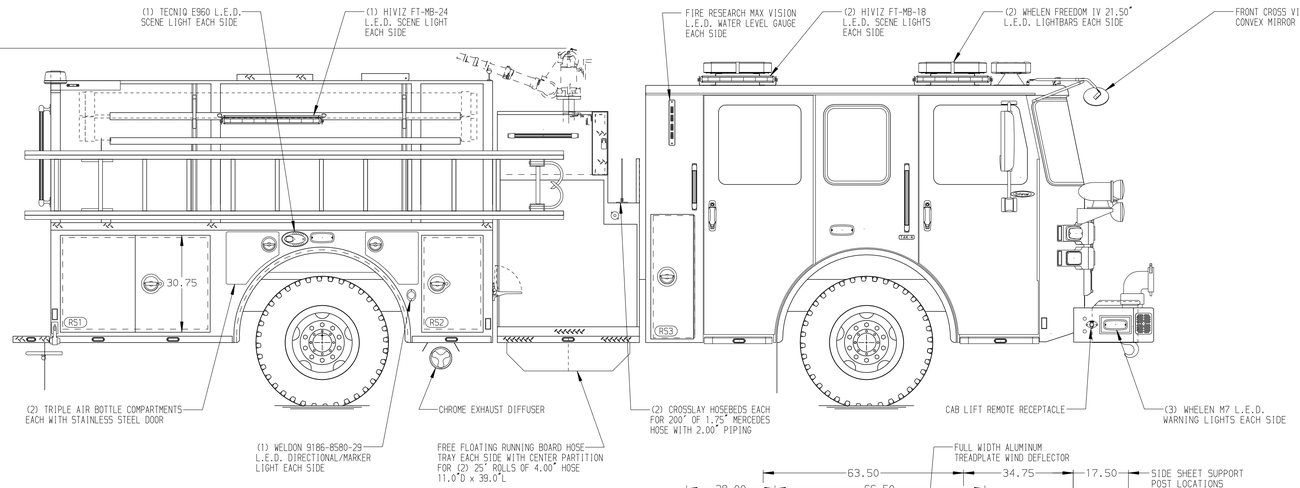

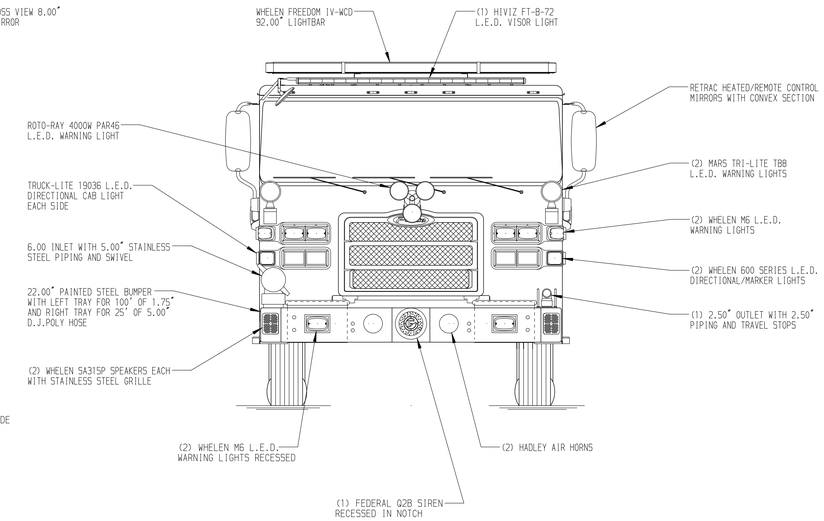

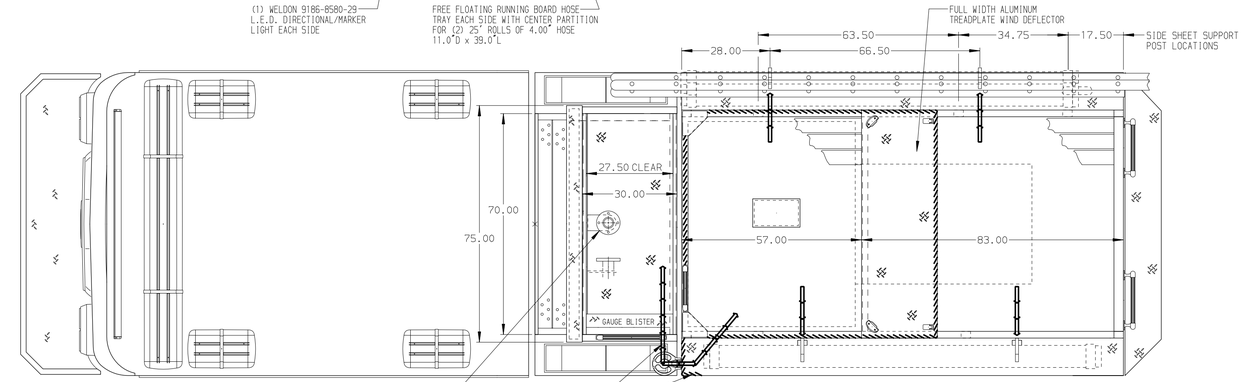

HOSEBED CAPACITIES

1. 400' OF 1.75" D.J. POLY HOSE
2. 800' OF 3.00" D.J. POLY HOSE
3. 1500' OF 4.00" D.J. POLY HOSE
4. 300' OF 1.75" D.J. POLY HOSE

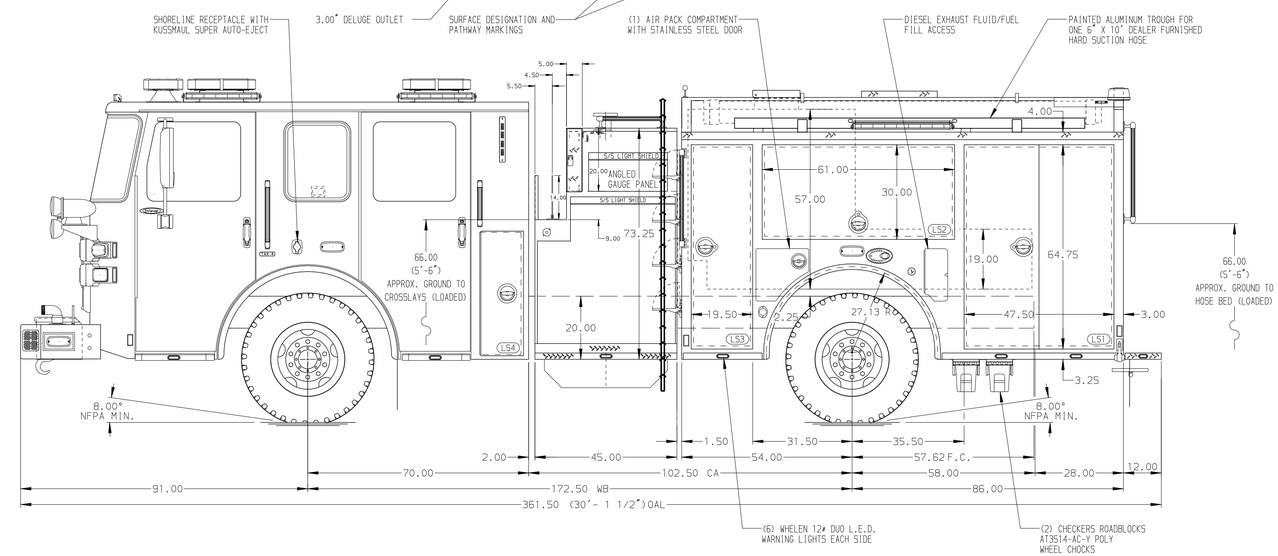

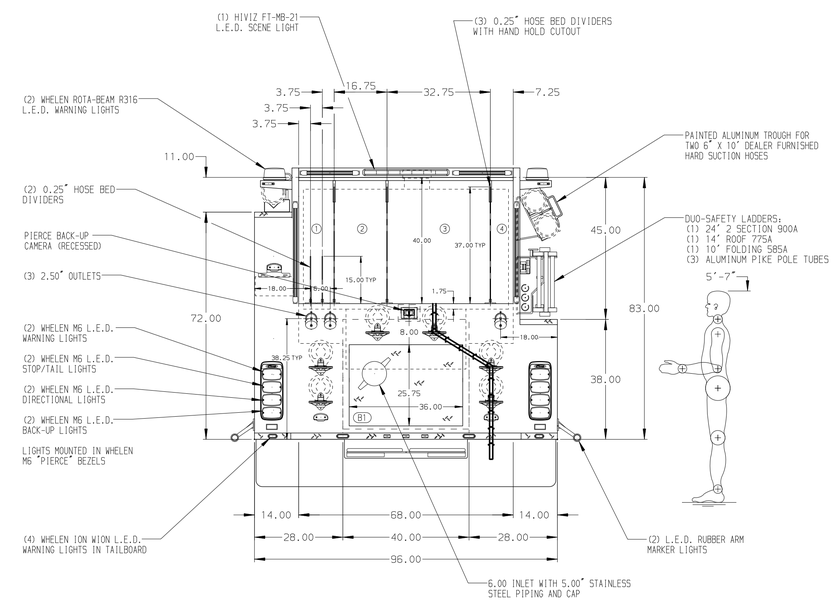

ALUMINUM BODY

SIDE ROLL & FRONTAL IMPACT PROTECTION

NOTE

DIMENSIONS SHOWN ARE APPROXIMATE AND ARE SUBJECT TO MINOR DEVIATIONS AS MAY OCCUR OR BE NECESSARY IN CONSTRUCTION.
MINOR DETAILS NOT SHOWN.

1. BATTERY CHARGER LOCATED BEHIND DRIVER'S SEAT
2. BATTERY CHARGER INDICATOR BEHIND DRIVER'S SEAT DISPLAYED THROUGH WINDOW
3. STAINLESS STEEL SCUFFPLATE ON BODY REAR CORNERS
4. BRUSHED STAINLESS STEEL SCUFFPLATE BOTTOM OF DOOR FRAME IN COMPARTMENTS LS1, LS2, LS3, RS1 AND RS2
5. BRUSHED STAINLESS STEEL SCUFFPLATE INSIDE EACH BODY COMPARTMENT DOOR IN LS1, LS3, RS1 AND RS2
6. KEYED LOCK FOR LATCH FOR COMPARTMENTS LS1, LS2, LS3, RS1 AND RS2
7. THREE FULL WIDTH/DEPTH ADJUSTABLE SHELVES - TWO IN LS1 AND ONE IN LS3
8. REVERSED HINGED DOOR ON COMPARTMENT LS3
9. ALUMINUM TREADPLATE ON THE FLOOR OF COMPARTMENT B1
10. ONE ALUMINUM TOOLBOARD ON BACK WALL OF COMPARTMENTS LS1, LS2 AND LS3
11. PARTITION BETWEEN LS1/B1 AND RS1/B1
12. AIR INLET RECESSED IN CAB STEP

REV	DATE	BY	CH
7	23APR21	JRO	PPE
6	19FEB21	JRO	PPE
5	21JAN21	JJB	PPE
4	08OCT20	JRO	CDU

CHASSIS DATA — MAKE: PIERCE — MODEL: ENFORCER

Pierce MANUFACTURING INC.

TITLE: 1750-750 WATER, 140" BODY, SIDE CONTROL, CROSSLAYS DELUGE, REAR INLET, ADJUSTABLE LADDER BRACKETS

FOR: ARNOLD VOLUNTEER FIRE DEPARTMENT, ARNOLD, MARYLAND

DWG NO.: 35395AD

JOB NO.	35395
SCALE	1:24
DATE	010CT20
DRAWN BY	JRO
CHECKED BY	CDU
SHEET SIZE	D
SHEET NO.	1 OF 1

View File Created 23-APR-2021 14:55:54