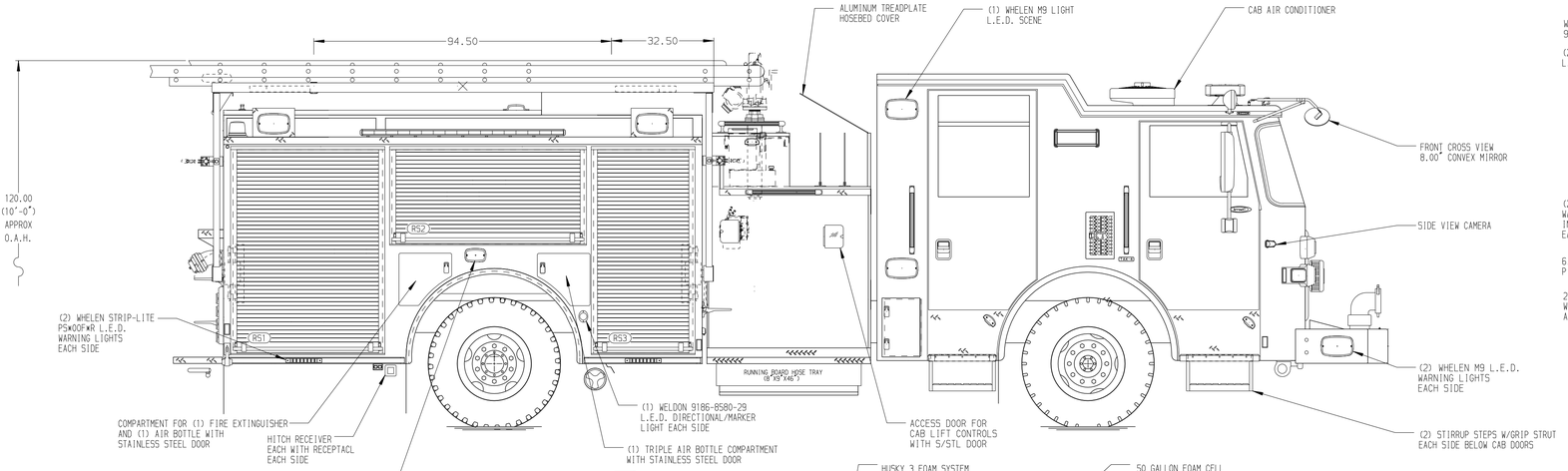

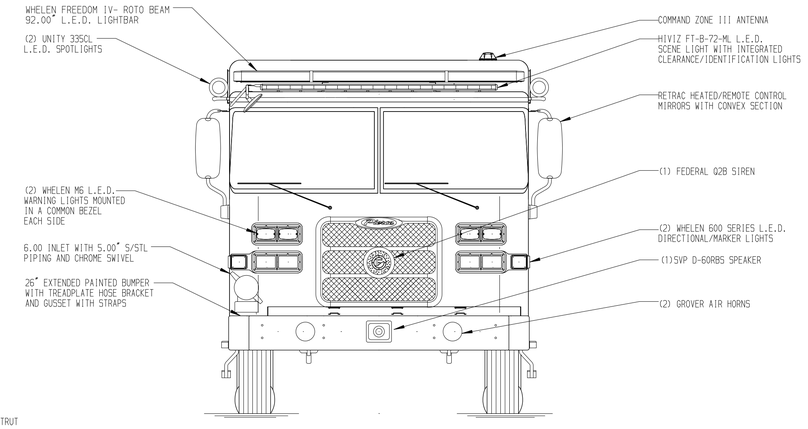

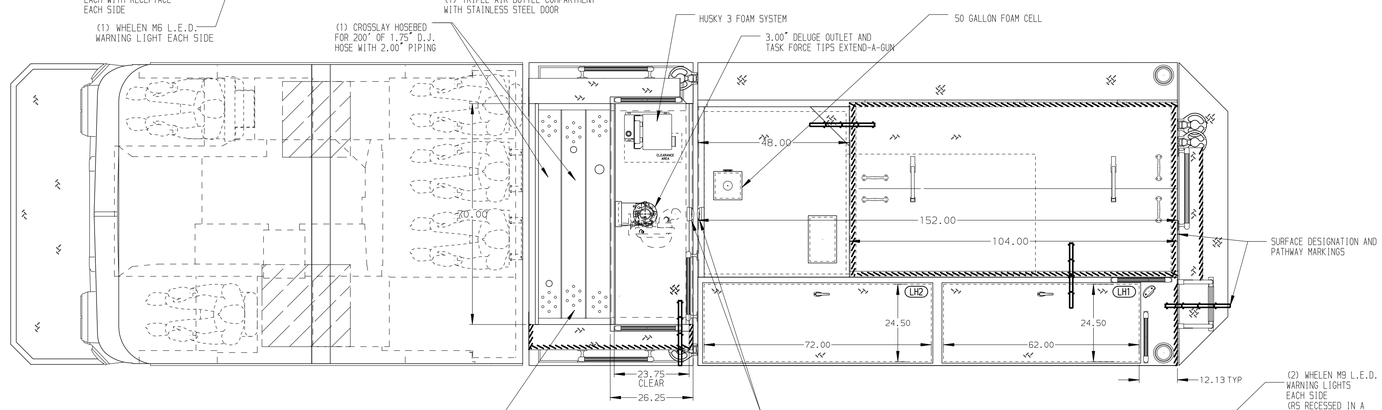

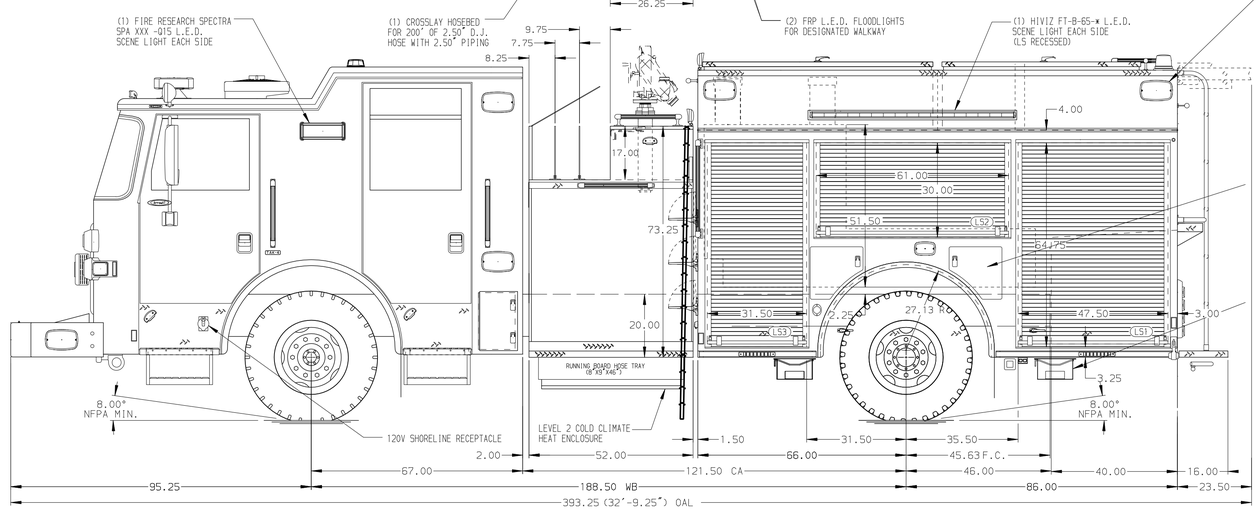

HOSEBED CAPACITIES
1. 450' OF 2.50" D.J. HOSE
2. 450' OF 2.50" D.J. HOSE
3. 500' OF 4.00" D.J. HOSE
4. 500' OF 4.00" D.J. HOSE

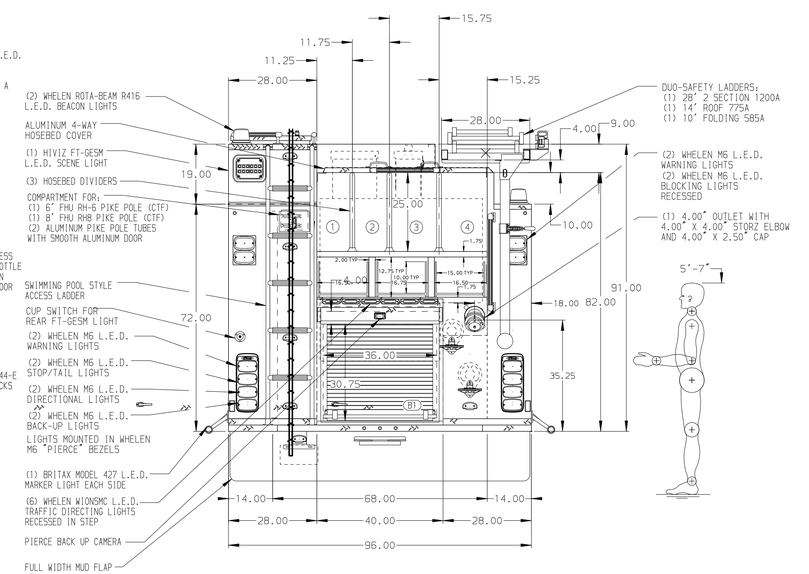

STAINLESS STEEL BODY

NOTE

DIMENSIONS SHOWN ARE APPROXIMATE AND ARE SUBJECT TO MINOR DEVIATIONS AS MAY OCCUR OR BE NECESSARY IN CONSTRUCTION.
MINOR DETAILS NOT SHOWN.

1. BATTERY CHARGER/COMPRESSOR LOCATED IN COMPARTMENT LS3
2. BATTERY CHARGE INDICATOR LOCATED NEAR DRIVER'S SEAT RISER WITH BRACKET
3. DUAL L.E.D. LIGHT STRIPS LOCATED ON THE FRONT OF THE HOSEBED
4. DRIP PAN GUARD FOR ROLL-UP DOOR LOCATED LS1,LS2,LS3,RS1,RS2,RS3 AND B1
5. ONE FULL WIDTH/DEPTH ADJUSTABLE SHELF IN COMPARTMENTS RS1 AND RS3; TWO IN LS3
6. ONE ADJUSTABLE TILTING SLIDE-OUT TRAY IN COMPARTMENTS LS2; TWO IN LS1
7. ONE FLOOR MOUNTED SLIDE-OUT TRAY IN COMPARTMENTS LS1,LS3,RS1,RS3 AND B1
8. SLIDE-OUT TOOL BOARD WITH PEGBOARD PATTERN IN COMPARTMENT LS3
9. PAC TRAC ON THE REAR WALL OF COMPARTMENTS RS1,RS2 AND RS3
10. ONE VERTICAL PARTITION IN COMPARTMENT LS3

REV	DATE	BY	CH
3	01MAR21	LME	JJR
2	21JAN21	JJB	JJR
1	16OCT20	LME	EGO

CHASSIS DATA
MAKE: PIERCE
MODEL: ARROW XT

Pierce MANUFACTURING INC.

TITLE: 1500-D-550P 500 GAL WATER, 50 FOAM, 152" BDY DS FL HGHT & DPTH FRNT & RR,PS FL HGHT FRNT & RR

FOR: GLENVIEW FIRE DEPARTMENT, VILLAGE OF GLENVIEW, ILLINOIS

DWG NO.: 35501AD

JOB NO.: 35501
SCALE: 1:24
DATE:
DRAWN BY: LME
CHECKED BY: EGO
SHEET SIZE: D
SHEET NO.: 1 OF 1

View File Created 02-MAR-2021 10:37:36