RIGHT SIDE COMPARTMENTS CONTAIN THE FOLLOWING:

COMPARTMENT RS1 CONTAINS:
- (1) RACK FOR 4 AIR BAGS
- (1) STD DEPTH ADJ SHELF
- (1) STD DEPHT FLOOR MOUNTED TRAY
- (1) STD DEPTH ADJ SLIDE OUT TRAY
- (2) POLY TOOL BOXES
- (1) 15/20A,120V DUPLEX RECEPTACLE
- (1) FOLD DOWN PLATFORM
-

COMPARTMENT RS2 CONTAINS:
- (1) VERTICAL REAR WALL DIVIDER
- (1) RACK FOR 4 SHEETS OF PLYWOOD
- (1) FALSE FLOOR ABOVE RACK
-

COMPARTMENT RS3 CONTAINS:
- (1) RACK WITH 4 STORAGE TROUGHS
- (4) POLY TOOL BOXES
- (2) 1/2 DEPTH "L"-SHAPED TOOLBOARDS
- (1) 15/20A,120V DUPLEX RECEPTACLE
-
-

COMPARTMENT RS4 CONTAINS:
- (1) CAB LIFT CONTROLLER
- (1) 15/20A,120V DUPLEX RECEPTACLE
- (1) VERTICAL COMPARTMENT DIVIDER
- (1) STOKES BASKET RACK
- (3) STORAGE TROUGHS
- (1) 28"DP FLOOR MOUNTED SLIDEMASTER TRAY WITH TOOLBOARD
- (1) RACK FOR 4 EXTINGUISHES
- (4) ZICO SCBA BRACKETS
- PEGBOARD ON LEFT WALL OF COMPARTMENT
- (1) RACK FOR 4 PIKE POLES
- COMPARTMENT HEATER

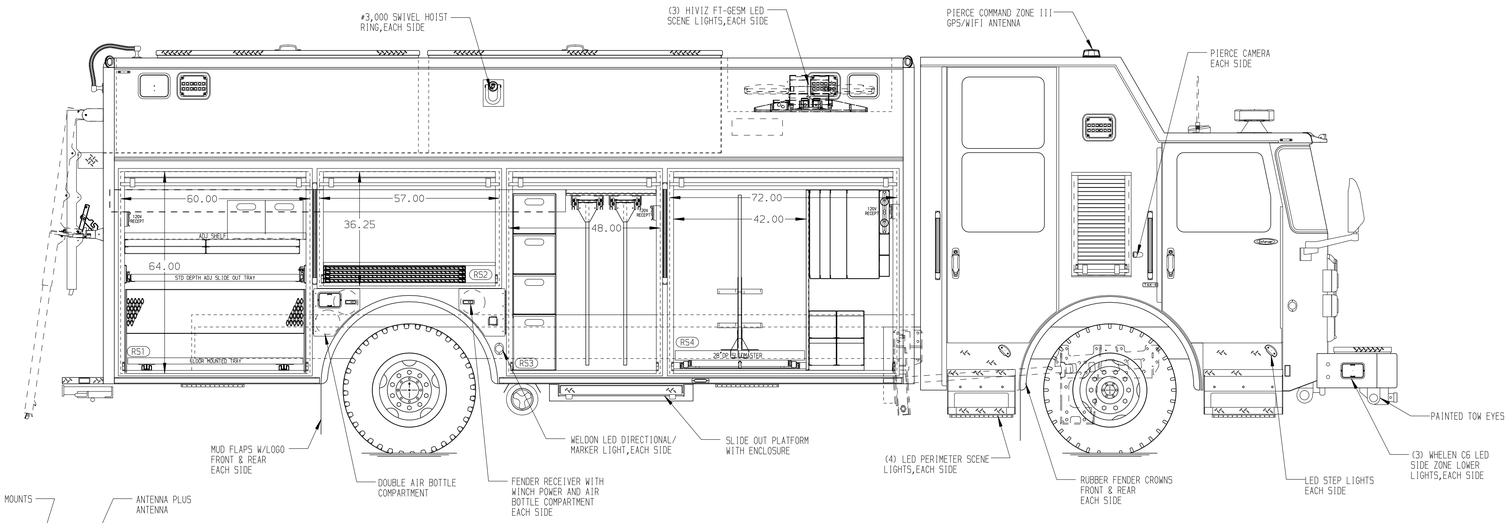

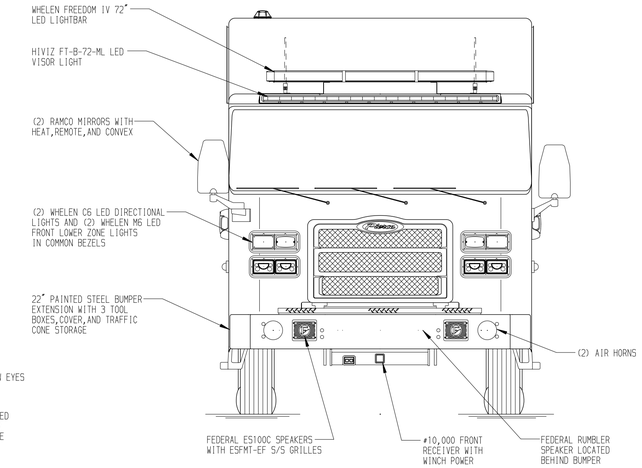

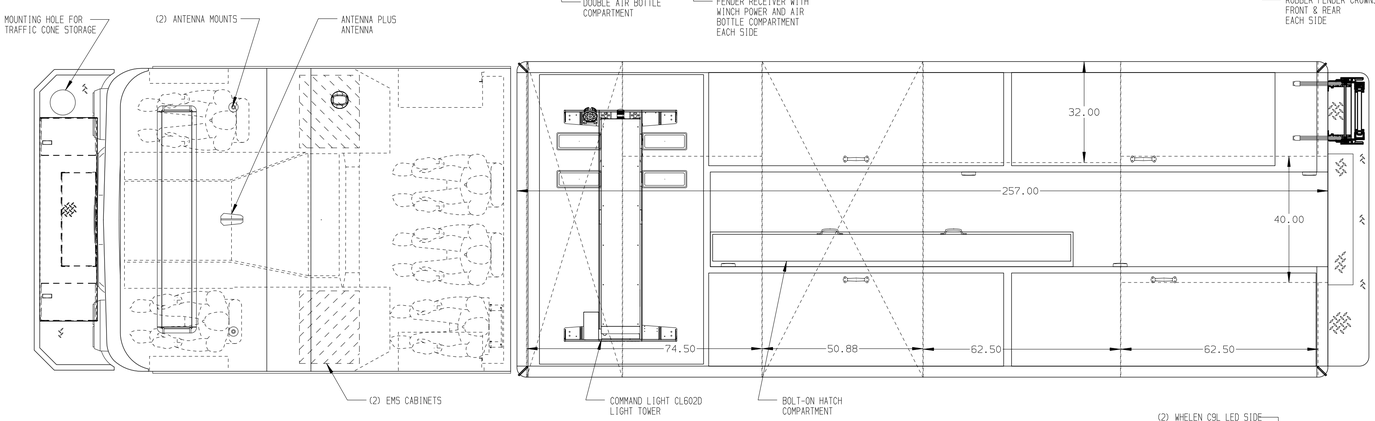

REAR COMPARTMENT CONTAINS THE FOLLOWING:

COMPARTMENT B1 CONTAINS:
- (1) HORIZONTAL FLOOR EXTENSION
- (1) RACK FOR 2-2"x12"x12' LUMBER
- (1) 48"DP ADJ SLIDE OUT/TILT TRAY
- (1) 60"DP FLOOR MTD SLIDE OUT TRAY
- (1) 15/20A,120V DUPLEX RECEPTACLE
- (1) 2-DRAWER C-TECH CABINET
-
-
-
-
-
-
-

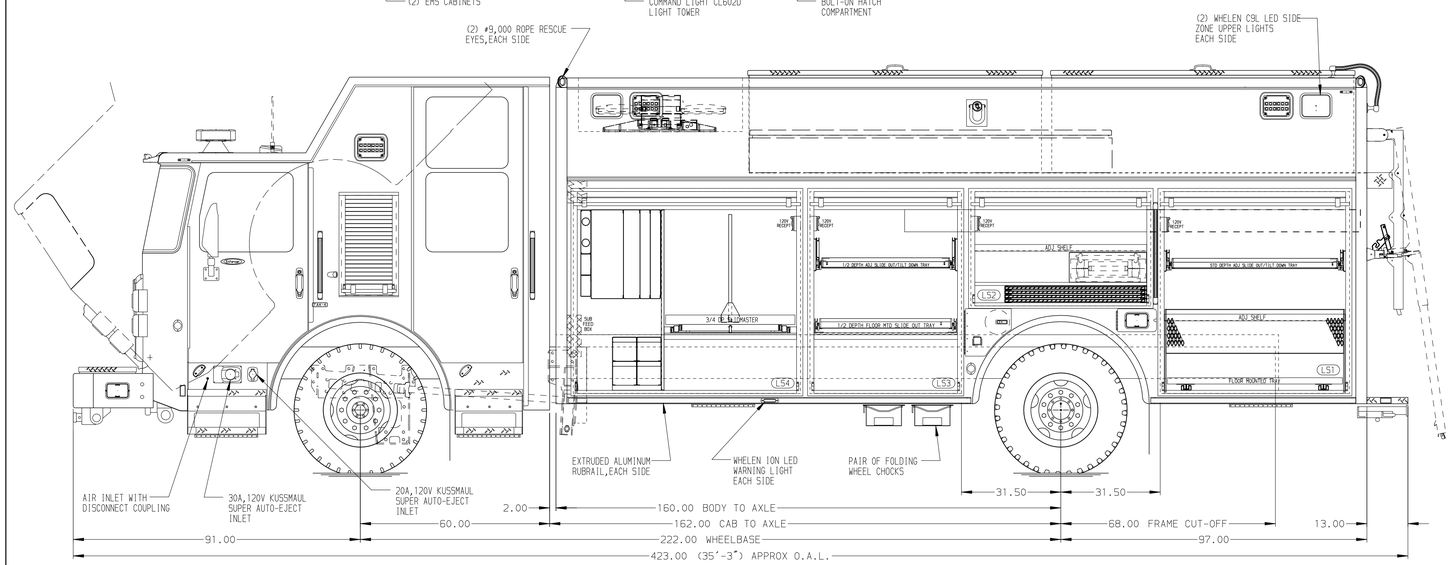

LEFT SIDE COMPARTMENTS CONTAIN THE FOLLOWING:

COMPARTMENT LS1 CONTAINS:
- (1) STD DEPTH ADJ SHELF
- (1) STD DEPTH ADJ SLIDE OUT/TILT TRAY
- (1) 15/20A,120V DUPLEX RECEPTACLE
- (1) STD DEPTH FLOOR MOUNTED TRAY
- (1) FOLD DOWN PLATFORM

COMPARTMENT LS2 CONTAINS:
- (1) VERTICAL REAR WALL DIVIDER
- (1) RACK FOR 4 SHEETS OF PLYWOOD
- (1) FALSE FLOOR ABOVE RACK
- (1) RACK FOR LITTLE GIANT LADDER
- (1) STD DEPTH ADJ SHELF
- (1) 15/20A,120V DUPLEX RECEPTACLE

COMPARTMENT LS3 CONTAINS:
- (1) HORIZONTAL FLOOR EXTENSION
- (1) 1/2 DEPTH ADJ SLIDE OUT/TILT TRAY
- (1) 1/2 DEPTH FLOOR MTD SLIDE OUT TRAY
- (1) 15/20A,120V DUPLEX RECEPTACLE
-
-

COMPARTMENT LS4 CONTAINS:
- (2) PD2180 BATTERY CHARGERS
- (1) HORIZONTAL FLOOR EXTENSION
- (1) 15/20A,120V DUPLEX RECEPTACLE
- (1) VERTICAL COMPARTMENT DIVIDER
- (1) STOKES BASKET RACK
- (3) STORAGE TROUGHS
- (1) 3/4 DEPTH FLOOR MOUNTED SLIDEMASTER TRAY WITH TOOLBOARD
- (1) COMMAND LIGHT CONTROLLER
- (1) RACK FOR 4 SCBA BOTTLES
- (1) SUB FEED BOX
-

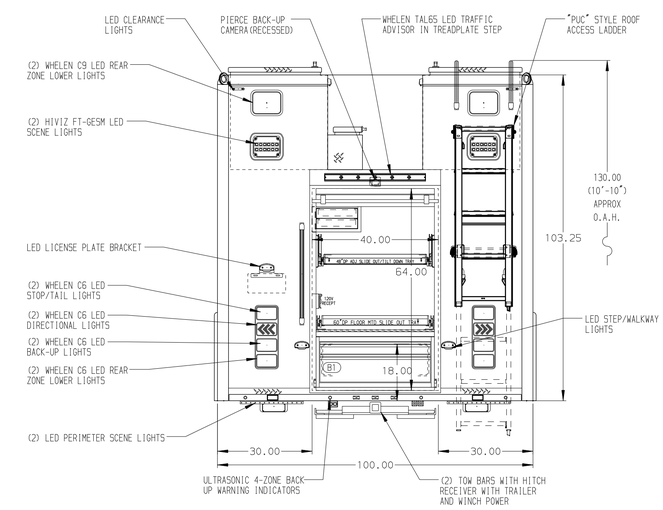

NOTE

DIMENSIONS SHOWN ARE APPROXIMATE AND ARE SUBJECT TO MINOR DEVIATIONS AS MAY OCCUR OR BE NECESSARY IN CONSTRUCTION.
MINOR DETAILS NOT SHOWN.

NOTES:
1. WARN #9,000 PORTABLE RECEIVER STYLE WINCH
2. POLISHED S/S SCUFFPLATES ON CAB AND CREW CAB DOOR JAMBS
3. HANDHELD SPOTLIGHT LOCATED IN THE OFFICER AREA
4. FIRECOM 5100D INTERCOM SYSTEM NEAR THE OFFICER SEAT
5. PIERCE LED STRIP LIGHTS IN ALL BODY AND HATCH COMPARTMENTS
6. DRY-DECK MATTING LOCATED ON ALL COMPARTMENT SHELVES AND TRAYS
7. (1) BLUE SEA 5032,12 CIRCUIT FUSE BLOCK BEHIND OFFICER'S SEAT AND EACH SIDE BODY COMPARTMENT

MAXIMUM O.A.L. 38'-0"

MAXIMUM O.A.H. 11'-0"

SIDE ROLL AND FRONTAL IMPACT PROTECTION

CLEAR DOOR WIDTH KEY

AMDOR ROLL UP DOORS:	-2 1/4"
GORTITE ROLL UP DOORS:	-2 1/2"
PIERCE DOUBLE LAP DOORS:	-4 1/4"
PIERCE LIFT-UP LAP DOORS:	-1 1/2"

(EX: 60"F-F - 2 1/4"= 57 3/4" CLEAR)
(F-F)= FRAME TO FRAME

REV	DATE	BY	CH
1	23JUN21	DHE	CDK
2	06MAY21	DHE	CDK
3	05JAN21	DHE	AZU

CHASSIS DATA
MAKE: PIERCE
MODEL: EN6024

Pierce MANUFACTURING INC.

TITLE: HEAVY DUTY RESCUE NON-WALKIN
FOR: WINNIPEG FIRE DEPARTMENT BID #216
DWG NO.: 35510AD

JOB NO.	35510 01&02
SCALE	1:24
DATE	
DRAWN BY	DHE 16DEC20
CHECKED BY	CDK 17DEC20
SHEET SIZE	D
SHEET NO.	1 OF 1

View File Created 24-JUN-2021 06:12:47