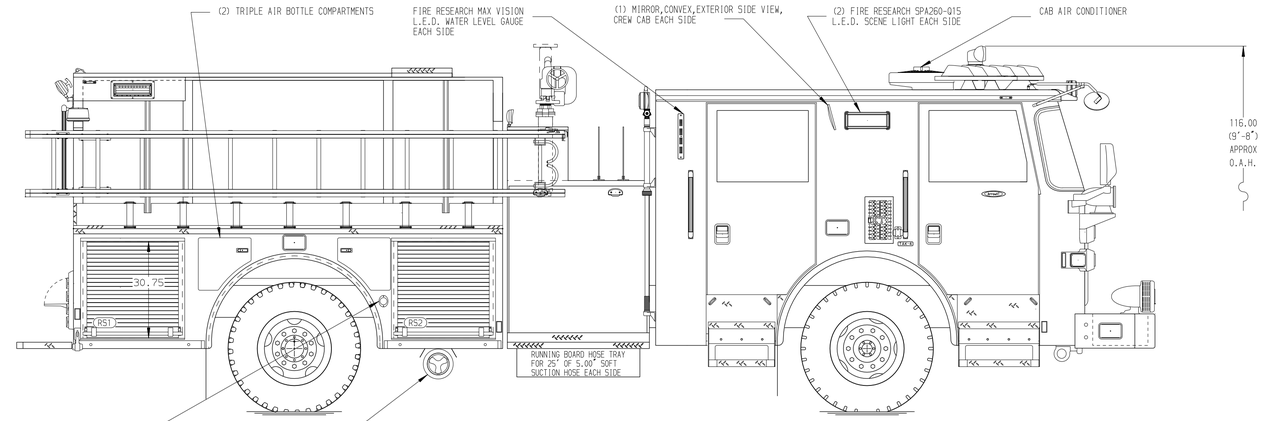

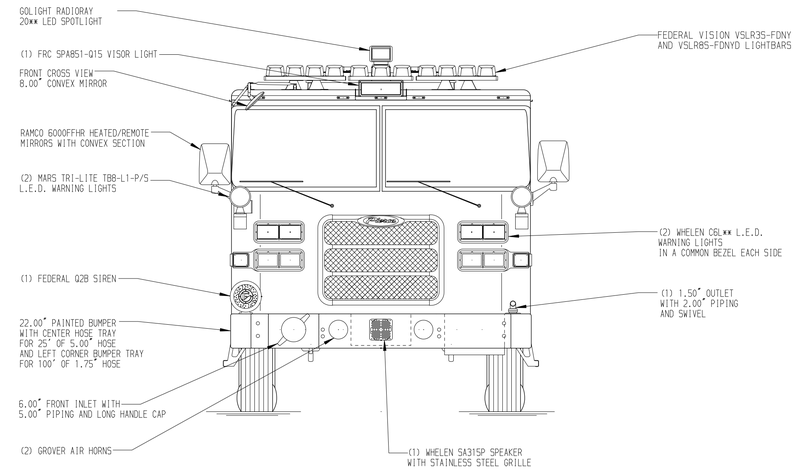

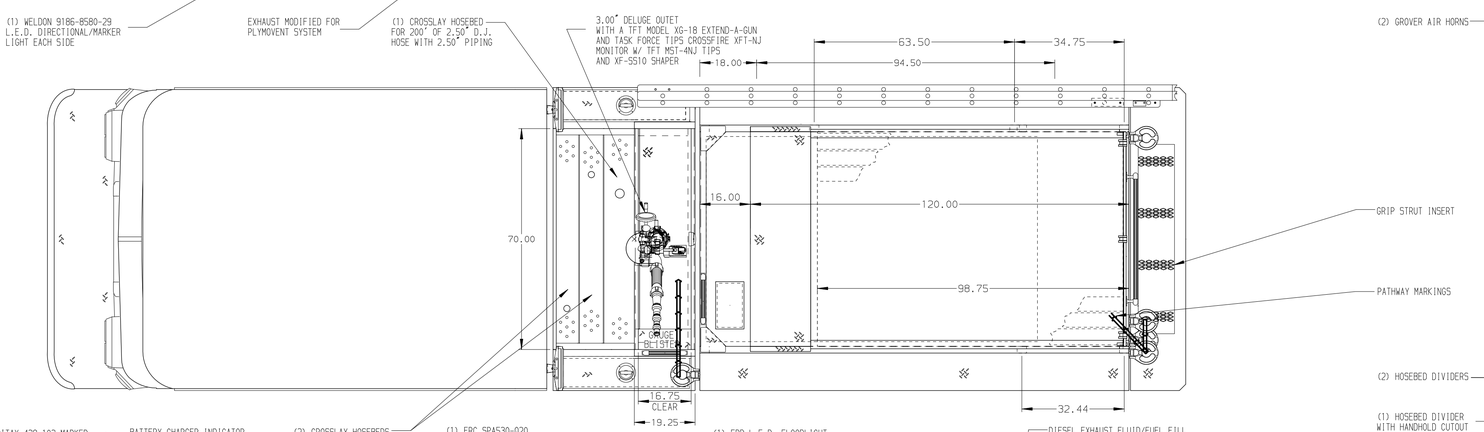

HOSEBED CAPACITIES

1. - 400' OF 2.50" D.J. POLY HOSE
2. - 400' OF 2.50" D.J. POLY HOSE
3. - 1500' OF 5.00" D.J. POLY HOSE
4. - 400' OF 1.75" D.J. POLY HOSE

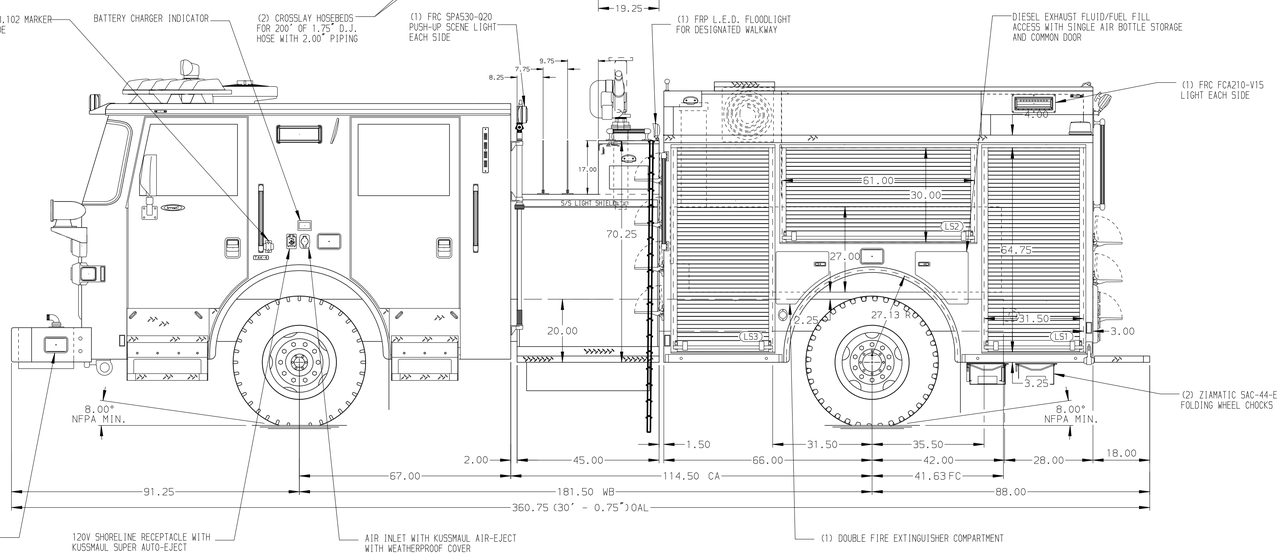

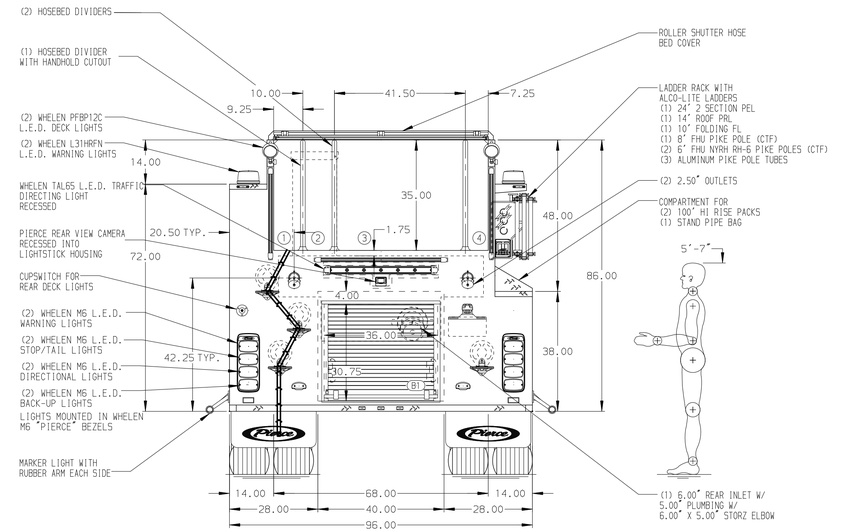

ALUMINUM BODY

MAXIMUM O.A.H. 118.00"

SIDE ROLL AND FRONTAL IMPACT PROTECTION

NOTE

DIMENSIONS SHOWN ARE APPROXIMATE AND ARE SUBJECT TO MINOR DEVIATIONS AS MAY OCCUR OR BE NECESSARY IN CONSTRUCTION.
MINOR DETAILS NOT SHOWN.

1. ONSPOT AUTOMATIC TIRE CHAINS TO BE PROVIDED AT THE REAR
2. BATTERY CHARGER LOCATED BEHIND THE DRIVER'S SEAT
3. DRIP PAN GUARD FOR ROLL-UP DOOR IN LS1, LS2, LS3, B1, RS1, AND RS2
4. FULL WIDTH/DEPTH ADJUSTABLE SHELVES THREE IN LS1 AND LS3 AND ONE IN RS1 AND RS2
5. ONE FLOOR MOUNTED SLIDE-OUT TRAY IN LS1 AND RS1
6. ALUMINUM SWING-OUT TOOLBOARD WITH PAC TRAC IN LS2
7. PAC TRAC ON BACK WALL OF LS3
8. 120V DUPLEX RECEPTACLE IN DRIVER'S SIDE AND PASSENGER'S SIDE EMS COMPARTMENT, LS2, LS3, RS1, AND RS2

REV	DATE	BY	CH
1	01MAR21	JJB	DTS
2	08FEB21	JJB	DTS
3	18DEC20	CDU	KOU

CHASSIS DATA
MAKE: PIERCE
MODEL: ARROW-XT

Pierce MANUFACTURING INC.

TITLE: 1500-D-500P 136" PUMPER BODY, 45" SIDE CONTROL PH (3) XLAYS, DELUGE, ROLLER SHUTTER HOSEBED COVER
FOR: TOWN OF WINDSOR, WINDSOR, CONNECTICUT
DWG NO.: 35738AD

JOB NO.	35738
SCALE	1:24
DATE	
DRAWN BY	JJB 10DEC20
CHECKED BY	CDU 10DEC20
SHEET SIZE	D
SHEET NO.	1 OF 1

View File Created 03-JUN-2021 09:30:28