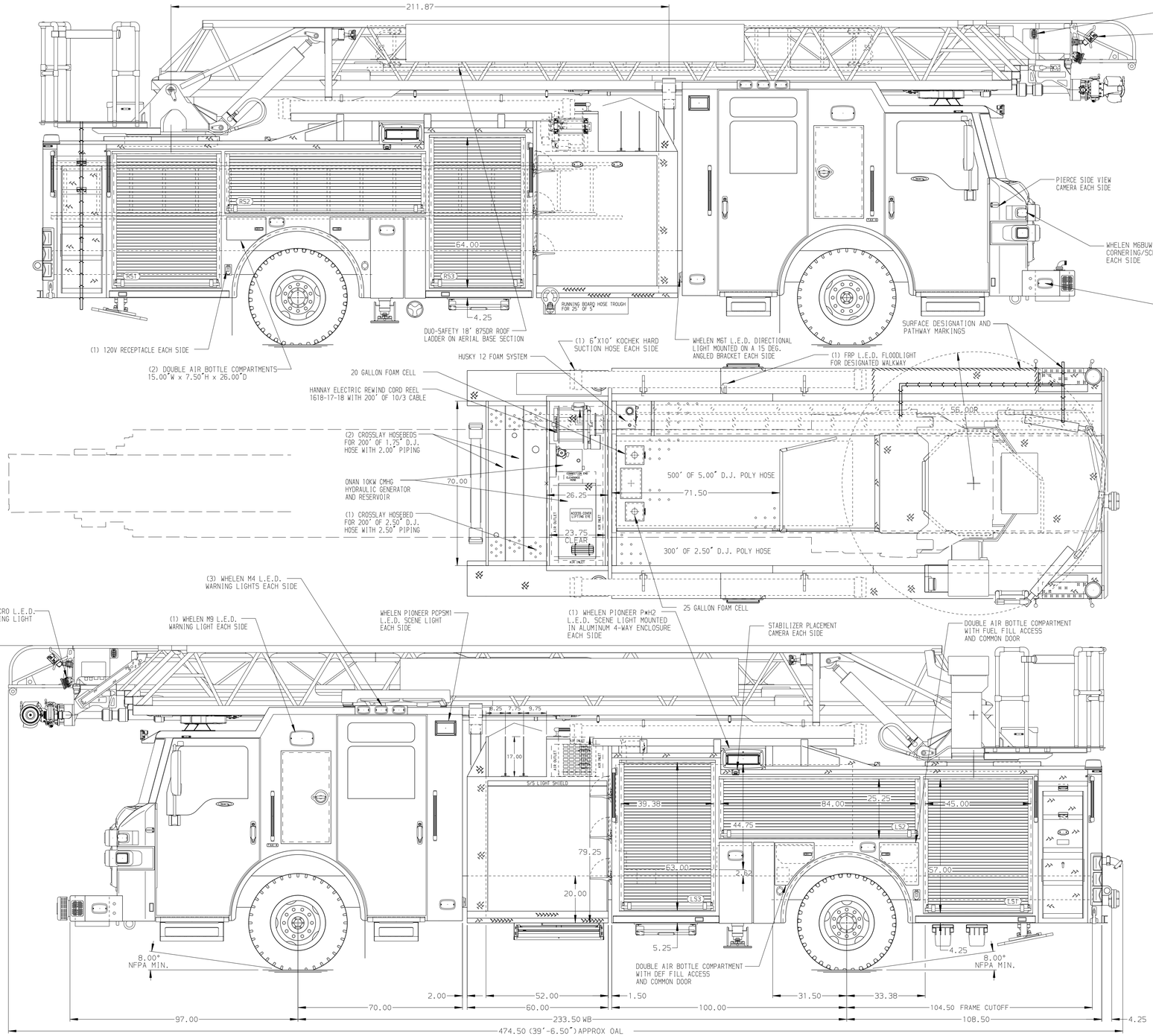

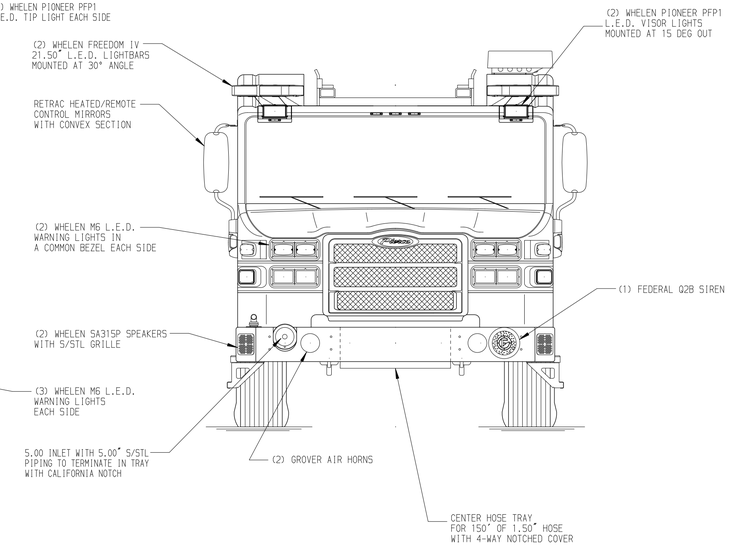

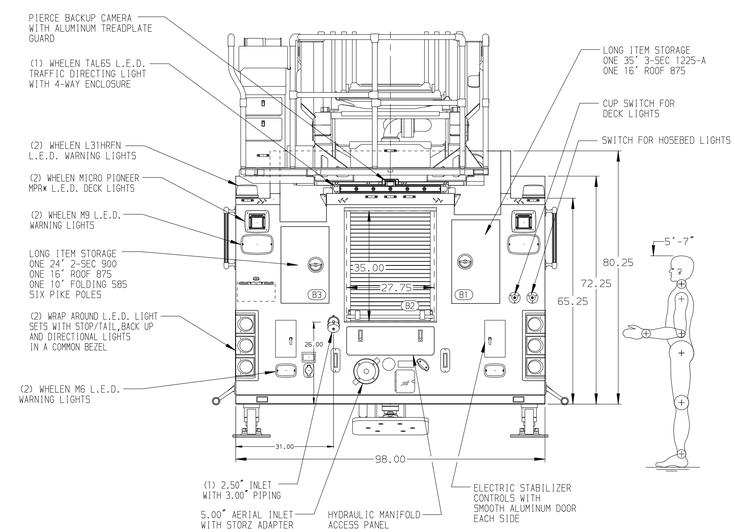

ALUMINUM BODY | MAXIMUM O.A.H. 141.00" | MAXIMUM O.A.L. 479.0" | SIDE ROLL AND FRONTAL IMPACT PROTECTION

NOTE

DIMENSIONS SHOWN ARE APPROXIMATE AND ARE SUBJECT TO MINOR DEVIATIONS AS MAY OCCUR OR BE NECESSARY IN CONSTRUCTION.
MINOR DETAILS NOT SHOWN.

1. ONE 1.50 OUTLET WITH 2.00 PIPING AND SWIVEL LOCATED IN CENTER BUMPER TRAY
2. SHORELINE RECEPTACLE WITH KUSSMAUL SUPER AUTO-EJECT LOCATED ON DRIVER SIDE REAR BULK HEAD
3. AIR INLET/OUTLET WITH DISCONNECT COUPLING IN THE DRIVER SIDE PUMP PANEL
4. BATTERY CHARGER LOCATED IN CAB PER SHOP ORDER
5. BATTERY CHARGE INDICATOR LOCATED ON DRIVERS SIDE REAR BULKHEAD
6. NO LIMITED RETRACTION REQUIRED
7. SEVEN ADJ SHELVES FULL WIDTH/DEPTH IN COMPARTMENTS PER SHOP ORDER
8. NON-RAISED AERIAL PEDESTAL
9. LIFTING EYE ROPE RESCUE ATTACHMENT AT AERIAL TIP
10. 1500 GPM HIGH FLOW WATERWAY
11. TWO FLOOR MOUNTED SLIDE-OUT TRAYS W/SIDE SLIDES IN COMPARTMENT PER SHOP ORDER
12. ONE SWING-OUT TOOLBOARD IN COMPARTMENT PER SHOP ORDER
13. 2-WAY INTERCOM SYSTEM BETWEEN AERIAL TIP AND TURNTABLE
14. ONE VERTICAL PARTITION INCOMPARTMENT PER SHOP ORDER
15. CIRCUIT BREAKER PANEL IN COMPARTMENT PER SHOP ORDER
16. ONE 120V 5-PLACE RECEPTACLE LOCATED PER SHOP ORDER
17. RUNG LIGHTING ON AERIAL LADDER
18. AC POWER TO AERIAL TIP

REV	DATE	BY	CH
1	01JUN21	LWE	JGO
2	26APR21	LWE	CWI
3	26MAR21	LWE	NDA

CHASSIS DATA
MAKE: PIERCE
MODEL: VELOCITY

Pierce MANUFACTURING INC.

TITLE: 107' ASCENDANT AERIAL LADDER AND BODY ASSEMBLY
500 GALLON WATERTANK-455 WATER/25 FOAM/20 FOAM

FOR: SEDGWICK COUNTY FIRE DISTRICT #1
WICHITA, KS

DWG NO.: 35951AD

JOB NO.	35951
SCALE	1:24
DATE	
DRAWN BY	LWE
15MAR21	
CHECKED BY	NDA
19MAR21	
SHEET SIZE	D
SHEET NO.	1 OF 1

View File Created 15-JUN-2021 11:23:35