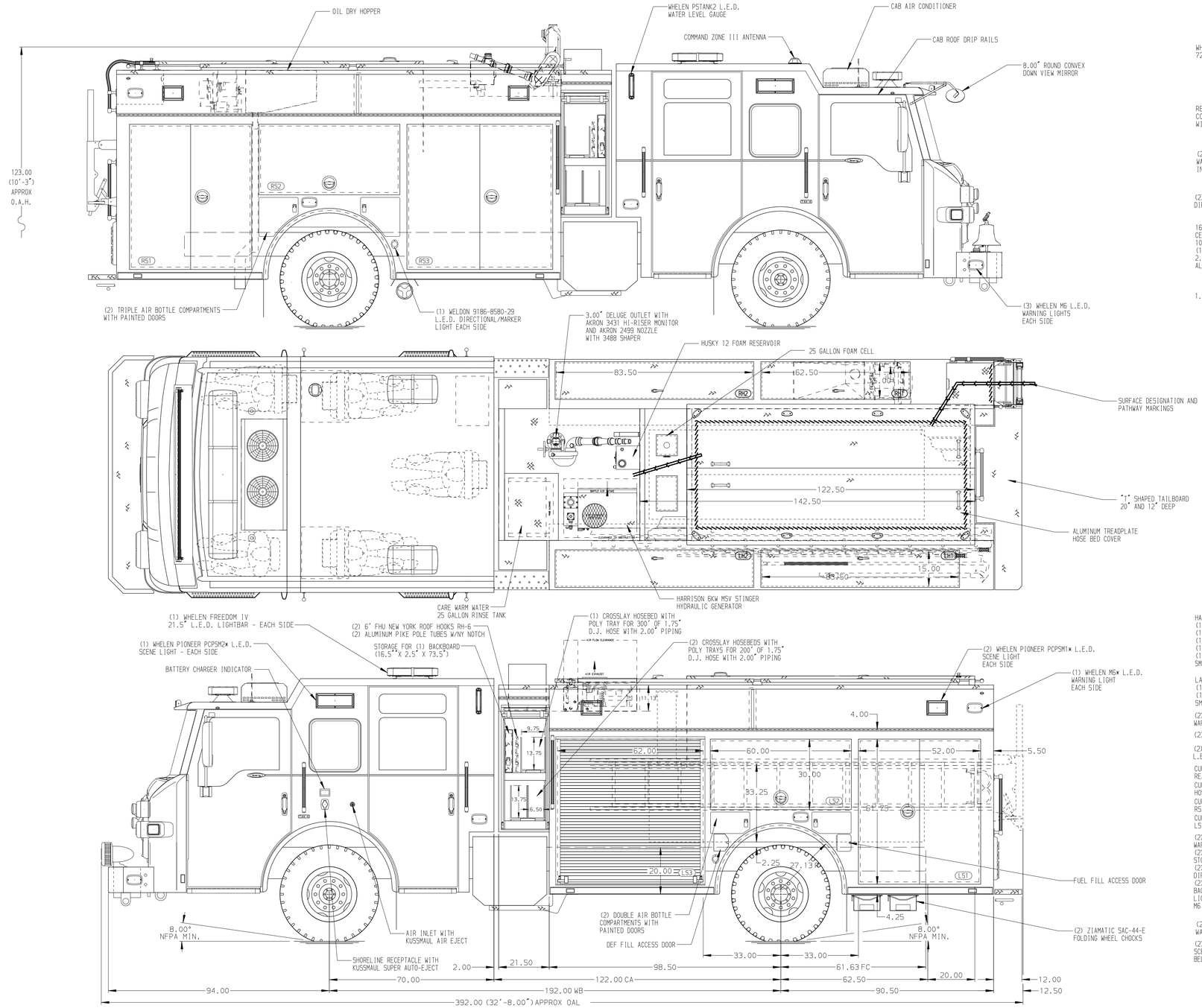

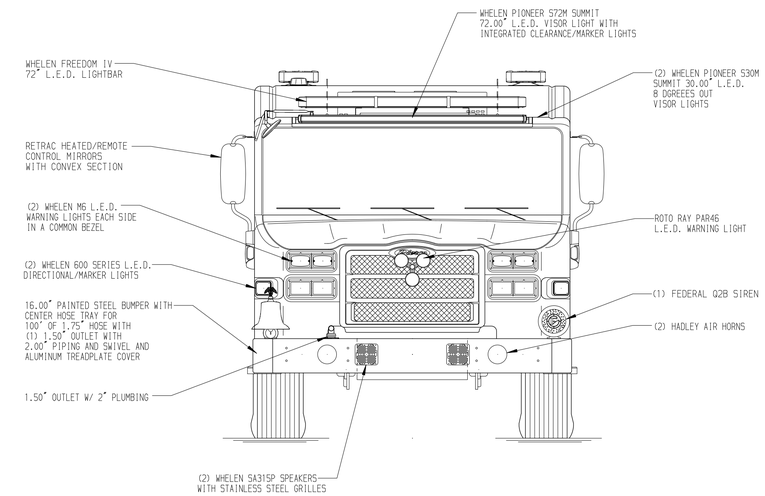

HOSEBED CAPACITIES
1. 1000' OF 5.00" D.J. POLY HOSE
2. 300' OF 2.50" D.J. POLY HOSE
3. 300' OF 3.00" D.J. POLY HOSE

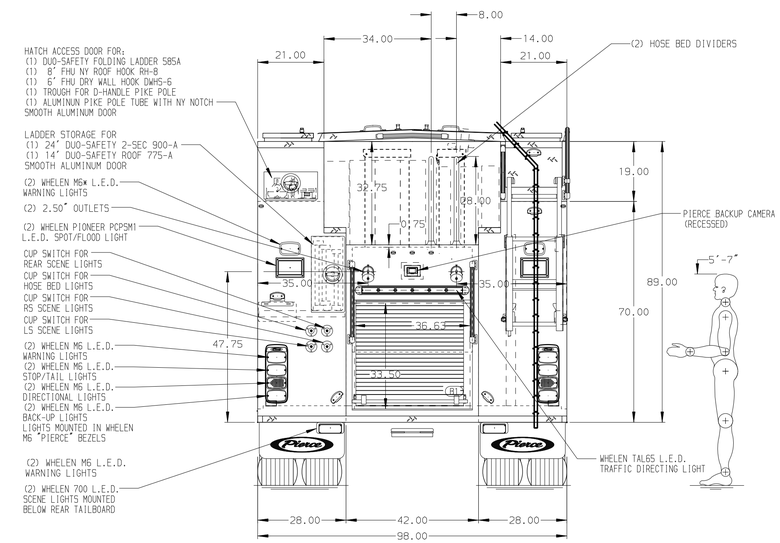

ALUMINUM BODY

SIDE ROLL AND FRONTAL IMPACT PROTECTION

NOTE
DIMENSIONS SHOWN ARE APPROXIMATE AND ARE SUBJECT TO MINOR DEVIATIONS AS MAY OCCUR OR BE NECESSARY IN CONSTRUCTION.
MINOR DETAILS NOT SHOWN.

1. AIR INLET WITH DISCONNECT COUPLING LOCATED AT DRIVER'S SIDE PUMP PANEL
2. BATTERY CHARGER LOCATED BEHIND DRIVER'S SEAT
3. DUAL L.E.D. LIGHT STRIPS LOCATED IN HOSE BED
4. ONE HANNAY ELECTRIC REWIND CORD REEL MODEL 1616-17-18 WITH 200' OF 10/3 CABLE LOCATED IN HATCH COMPARTMENT RH1

REV	DATE	BY	CH
V	25AUG21	SAM	NPE
V	19AUG21	SAM	NPE
V	25JUN21	SAM	NPE
V	17MAY21	SAM	NPE

CHASSIS DATA
MAKE: PIERCE
MODEL: VELOCITY FR

Pierce MANUFACTURING INC.

TITLE: 1500-D-525P, 500G WATER W/25G FOAM, 189" RESCUE PUC (3) XLAYS, LADDERS THRU BODY, DELUGE, GENERATOR
FOR: LEAWOOD FIRE DEPARTMENT, LEAWOOD, KANSAS
DWG NO.: 36093AD-SH1

JOB NO.	36093 01-02
SCALE	1:24
DATE	
DRAWN BY	SAM 16MAR21
CHECKED BY	CZA 17MAR21
SHEET SIZE	D
SHEET NO.	1 OF 2

View File Created 29-SEP-2021 09:54:12