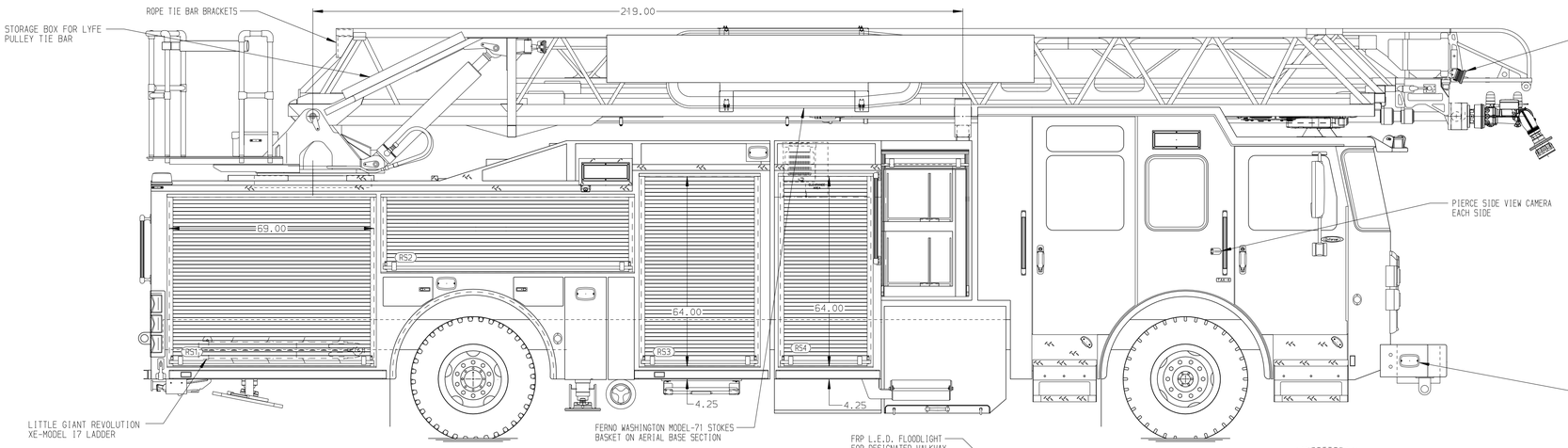

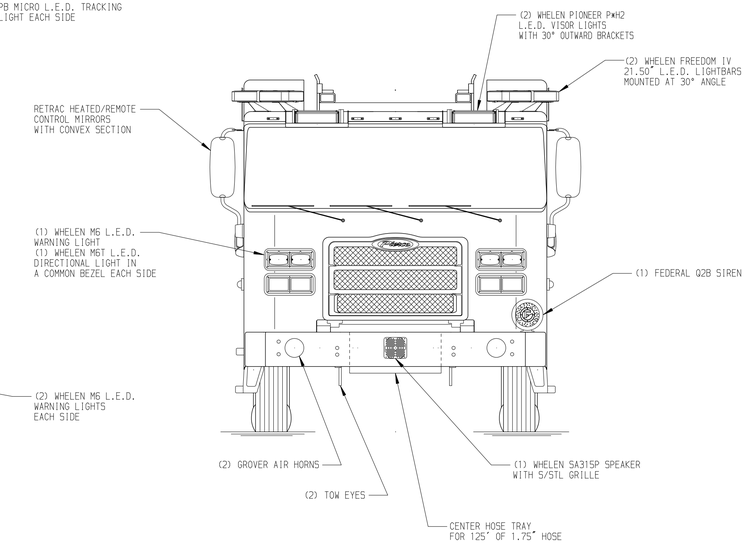

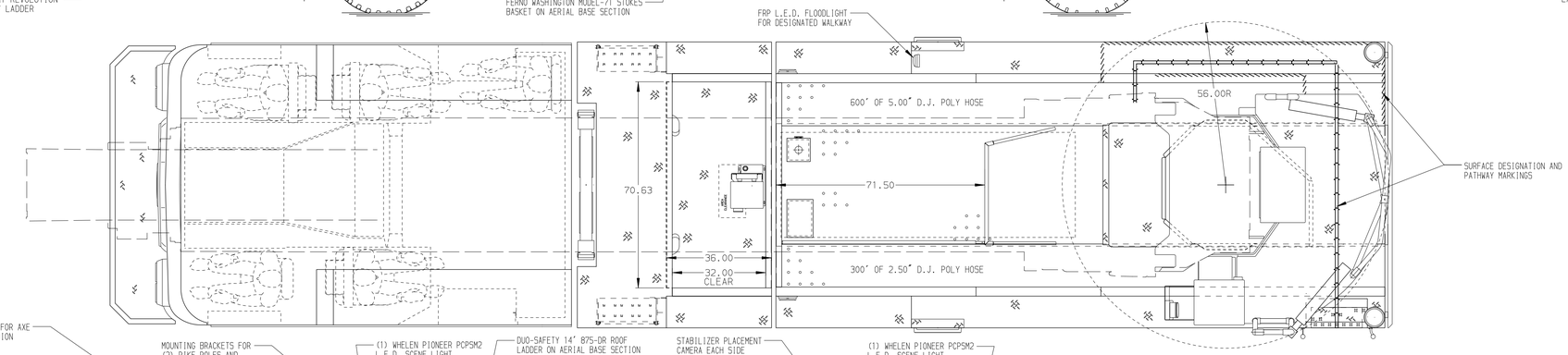

BODY	WATER TANK
107' Single Axle Ladder Aluminum Body PUC	470 Gallon Poly Water Tank
COMPT,LEFT SIDE FRONT	Foam System
Full Height Rollup Forward	Husky 3 Single Agent Foam System
COMPT,LEFT SIDE REAR	Foam Cell
Full Height Rollup Rearward	30 Gallon Foam Cell, Reduced Water, PUC
COMPT,RIGHT SIDE FRONT	
Full Height Rollup Forward	
COMPT,RIGHT SIDE REAR	
Full Height Rollup Rearward	

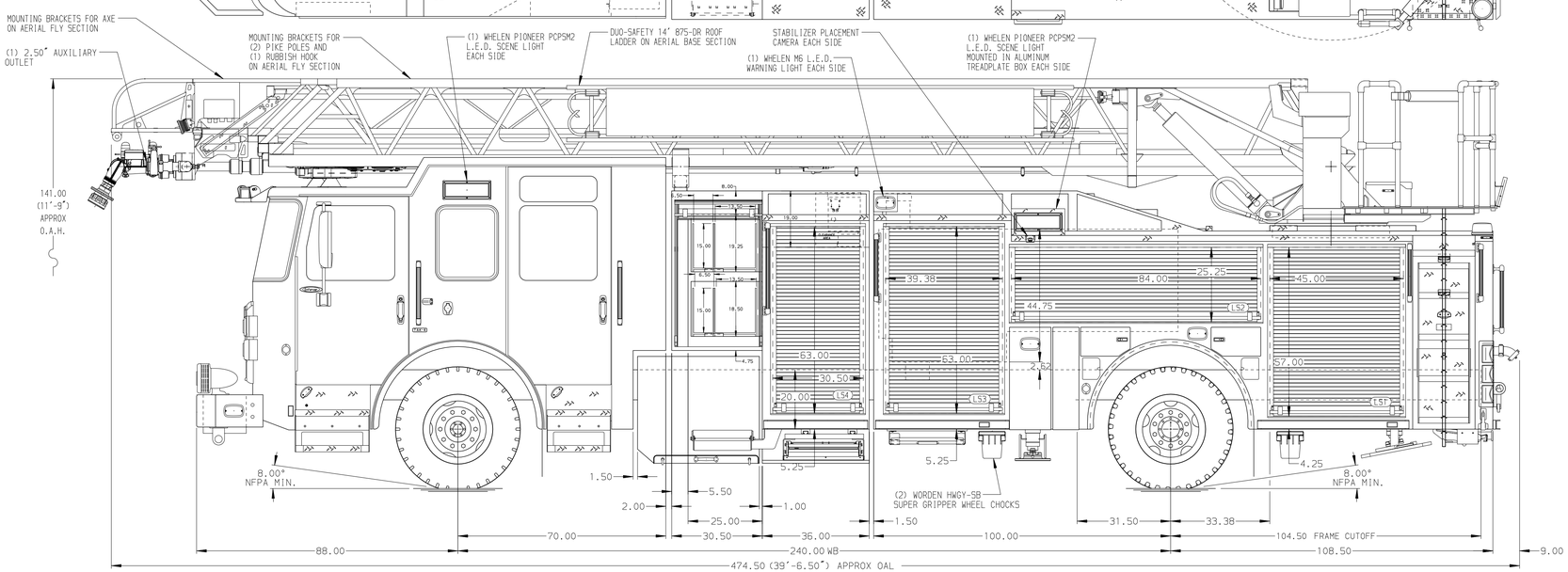

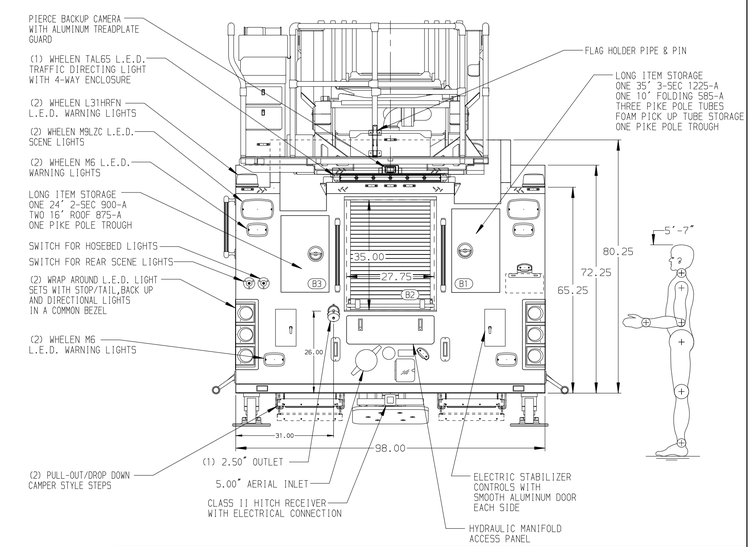

CHASSIS	CAB	AXLE,FRONT,CUSTOM	TRANSMISSION	PUMPHOUSE	CROSSLAYS,1.50"	SPEEDLAYS	SAFETY
Enforcer Chassis, PUC	7010 Notched Enforcer Cab, PUC	24,000 Lb TAK-4 Axle	ALLison 5th Gen, 3000 EVS P	Control Zone, PAL/PAP PUC	(2) 1.50",Full Width Trays,250' w/Nozzle (1 Lower, 1 Upper)	Speedlays Not Required	Side Roll and Frontal Impact Protection
ENGINE	BUMPER	AXLE,REAR		PUMP	CROSSLAYS,2.50"	GENERATOR	
450 HP Cummins L9 Engine	19" Extended Painted Steel	33,500 Lb Meritor Axle		1500 GPM Pierce PUC	(2) 2.50",Full Width Trays,300' w/nozzle (1 Lower, 1 Upper)	Generator Not Required	

NOTE

DIMENSIONS SHOWN ARE APPROXIMATE AND ARE SUBJECT TO MINOR DEVIATIONS AS MAY OCCUR OR BE NECESSARY IN CONSTRUCTION.
MINOR DETAILS NOT SHOWN.

1. ONE 1.50 OUTLET WITH 2.00 PIPING AND SWIVEL LOCATED IN CENTER BUMPER TRAY
2. SHORELINE RECEPTACLE WITH KUSSMAUL SUPER AUTO-EJECT LOCATED ON DRIVER SIDE OF THE CAB
3. AIR INLET WITH DISCONNECT COUPLING IN THE DRIVER SIDE STEPWELL
4. BATTERY CHARGER LOCATED BEHIND DRIVER SEAT
5. BATTERY CHARGE INDICATOR LOCATED ON THE DRIVER SIDE SEAT RISER
6. DUAL L.E.D. LIGHT STRIPS LOCATED IN HOSE BED
7. ELASTIC PULL STRAPS FOR ROLL-UP CROSSLAY MODULE DOOR EACH SIDE
8. SEVEN ADJUSTABLE FULL WIDTH/FULL DEPTH SHELVES IN COMPARTMENTS PER SHOP ORDER
9. ONE FLOOR MOUNTED SLIDE-OUT TRAY IN COMPARTMENT PER SHOP ORDER
10. ONE SWING-OUT ALUMINUM TOOL BOARD IN COMPARTMENT PER SHOP ORDER
11. CTECH (3) DRAWER ASSEMBLY IN COMPARTMENT PER SHOP ORDER
12. ONE VERTICAL PARTITION IN COMPARTMENT PER SHOP ORDER
13. FIRE RESEARCH 3-WAY INTERCOM SYSTEM BETWEEN AERIAL TIP,PUMP PANEL & TURNTABLE
14. TWO 120V 7-PLACE RECEPTACLE STRIPS LOCATED IN CAB PER SHOP ORDER
15. ONE 120V 4-PLACE DUPLEX RECEPTACLE LOCATED IN COMPARTMENT PER SHOP ORDER
16. NON-RAISED AERIAL PEDESTAL
17. LIFTING EYE ROPE RESCUE ATTACHMENT AT AERIAL TIP
18. 1500 GPM HIGH FLOW WATERWAY
19. GTT 794 L.E.D. OPTICOM EMITTER LOCATED AT AERIAL TIP
20. NO LIMITED RETRACTION REQUIRED

REV	DATE	BY	CH
27AUG21	TKA	PJP	
24JUN21	TKA	PJP	

CHASSIS DATA
MAKE: PIERCE
MODEL: ENFORCER

Pierce MANUFACTURING INC.

TITLE: 107' ASCENDANT AERIAL LADDER AND BODY ASSEMBLY
-
FOR: EAU CLAIRE FIRE & RESCUE
EAU CLAIRE, WISCONSIN

DWG NO.: 36197AD

JOB NO.: 36197
SCALE: 1:24
DATE
DRAWN BY: TKA
05MAY21
CHECKED BY: NDA
06MAY21
SHEET SIZE: D
SHEET NO.: 1 OF 1

View File Created 30-AUG-2021 09:34:58