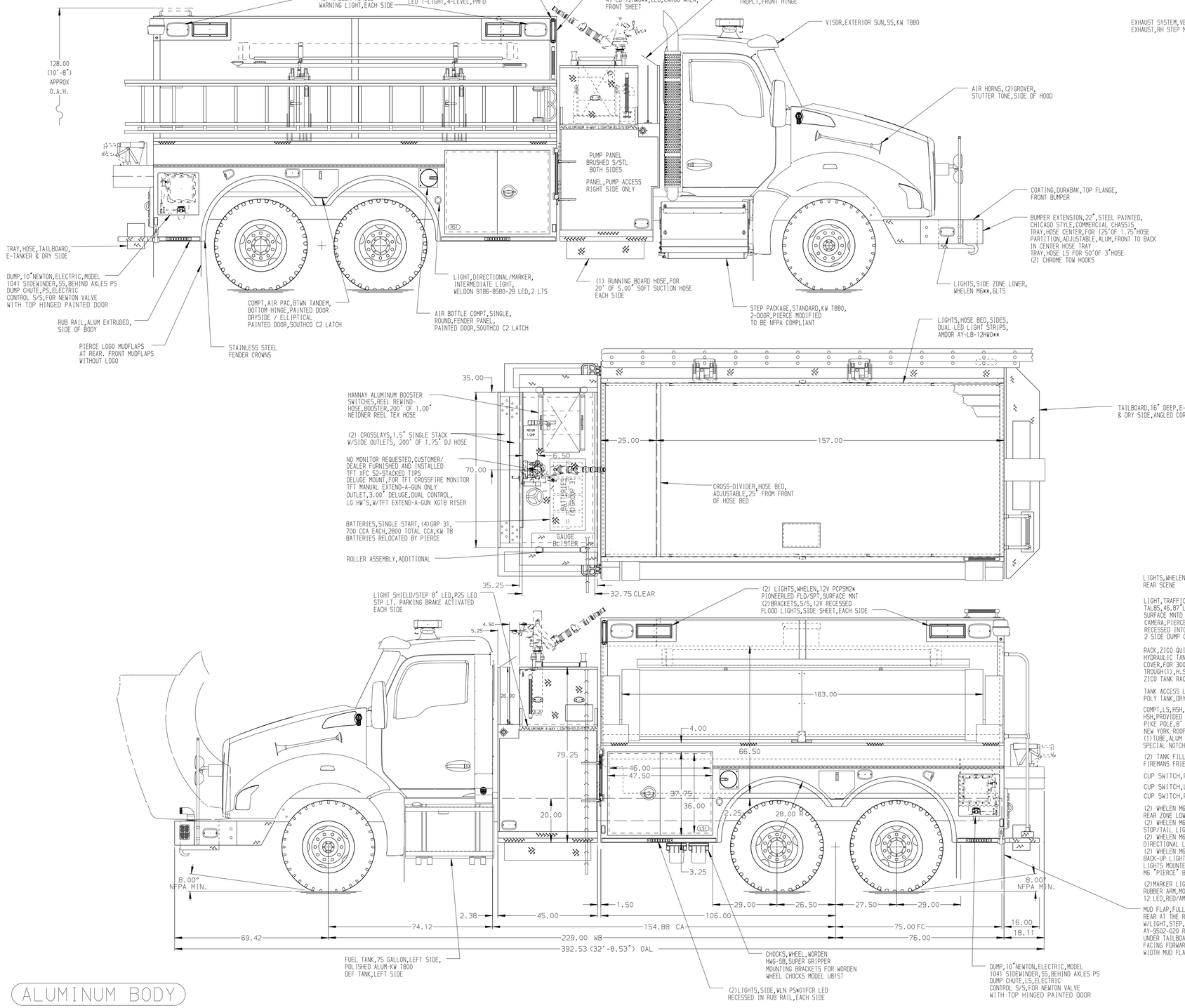

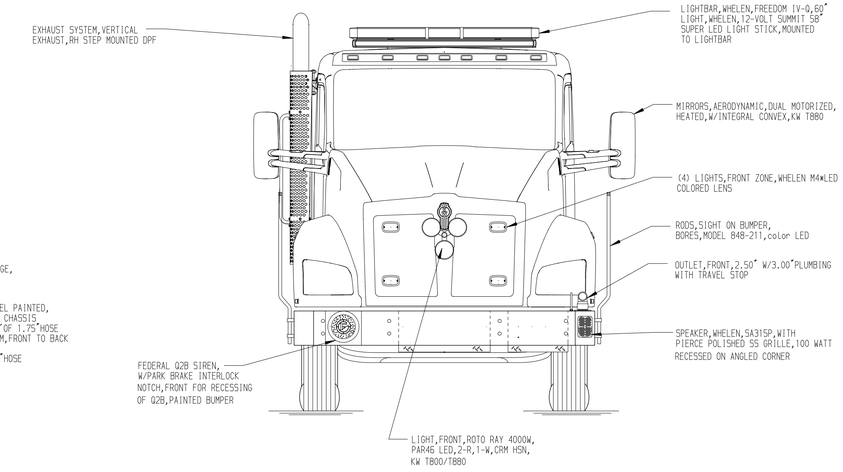

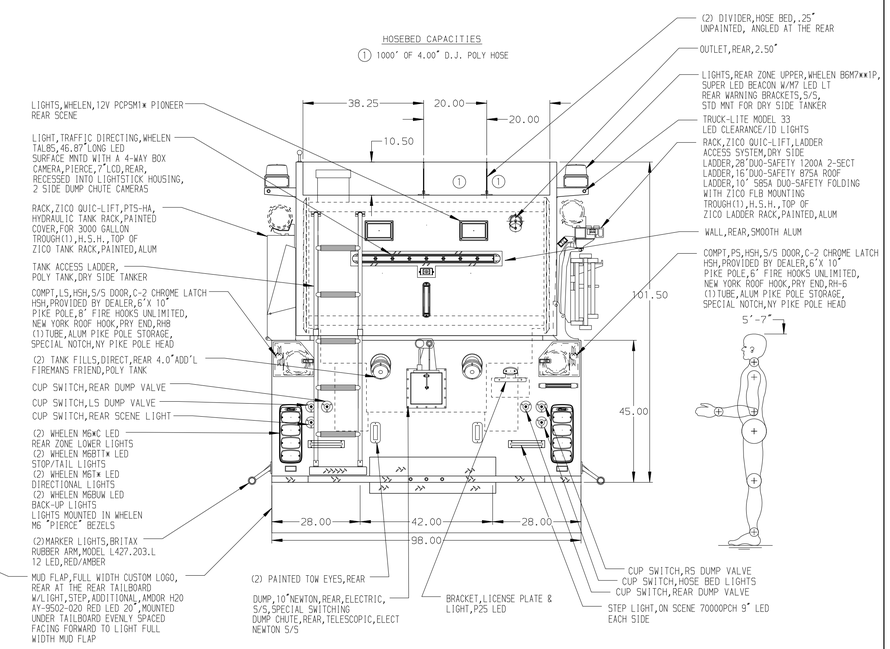

ALUMINUM BODY

NOTE

DIMENSIONS SHOWN ARE APPROXIMATE AND ARE SUBJECT TO MINOR DEVIATIONS AS MAY OCCUR OR BE NECESSARY IN CONSTRUCTION.
MINOR DETAILS NOT SHOWN.

REV	DATE	BY	CH
B	08NOV21	RHU	GSC
A	14OCT21	RHU	GSC
⊘	17JUN21	JLA	RWI

CHASSIS DATA — MAKE: KENWORTH — MODEL: T880

Pierce MANUFACTURING INC.

TITLE: 1500-D-3000P,182" DRYSIDE TANKER BODY 45"SIDE CONTROL,(2)1.5"CROSSLAYS

FOR: LOUISA COUNTY, LOUISA, VIRGINIA

DWG NO.: 36220AD

JOB NO.	36220
SCALE	1:24
DATE	04JUN21
DRAWN BY	JLA
CHECKED BY	RWI
10JUN21	
SHEET SIZE	D
SHEET NO.	1 OF 1

View File Created 09-NOV-2021 13:24:42