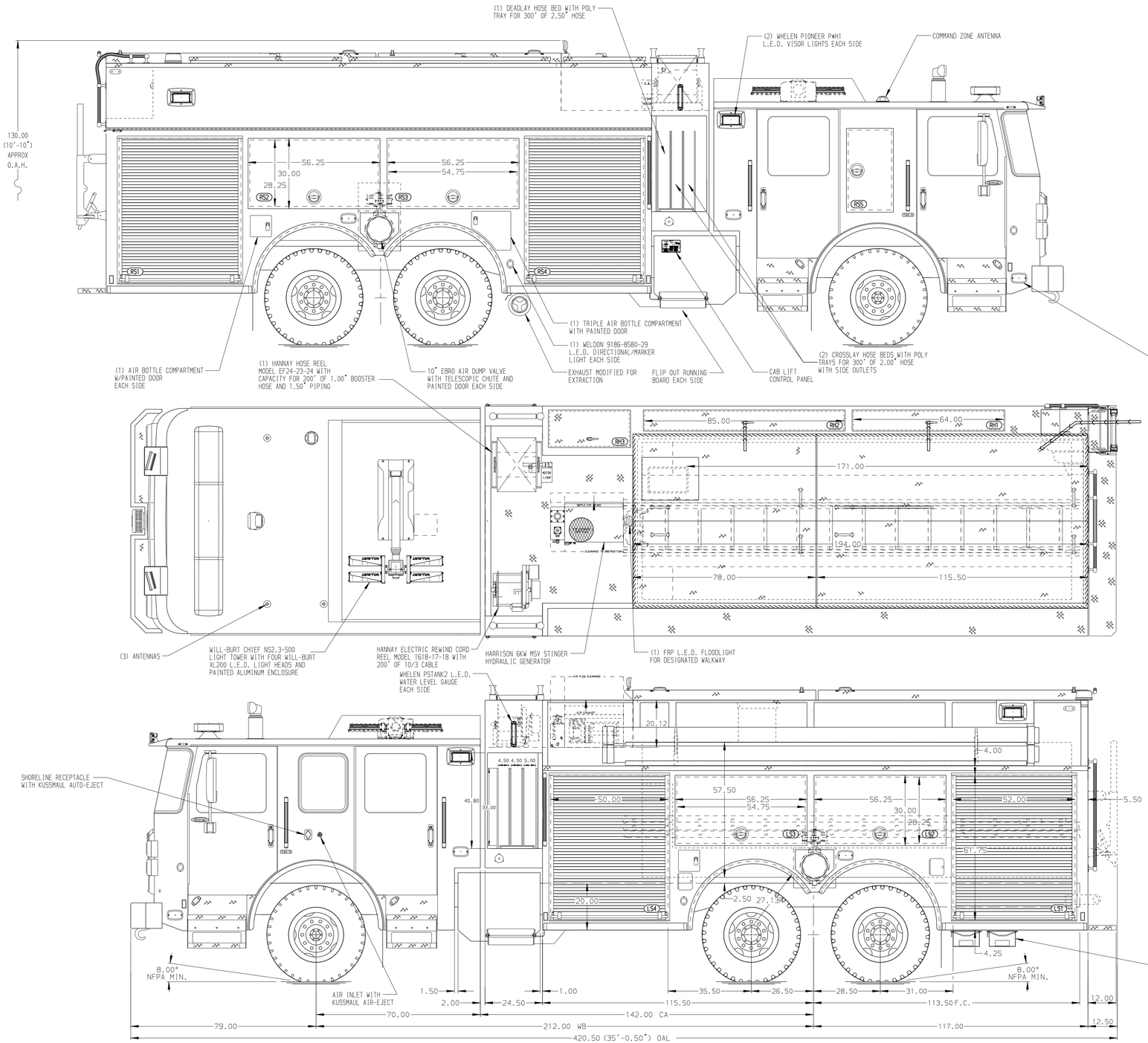

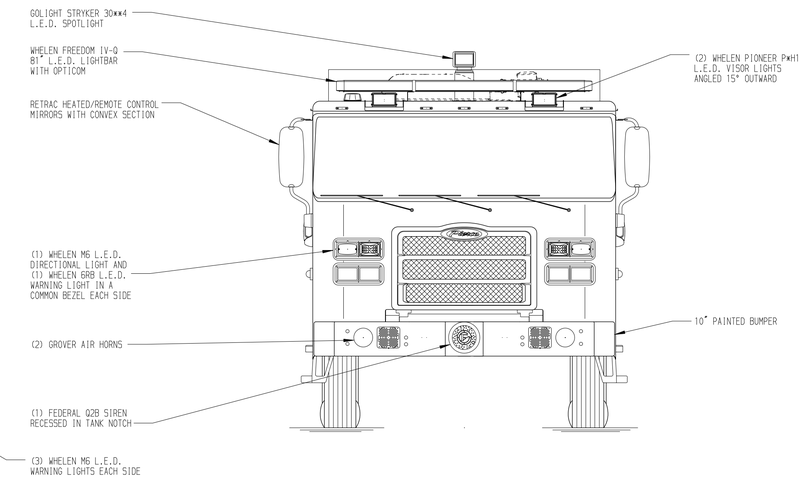

HOSEBED CAPACITIES

1. 500' OF 3.00" HOSE
2. 1000' OF 5.00" HOSE
3. 500' OF 2.50" HOSE
4. 100' OF 2.00" HOSE

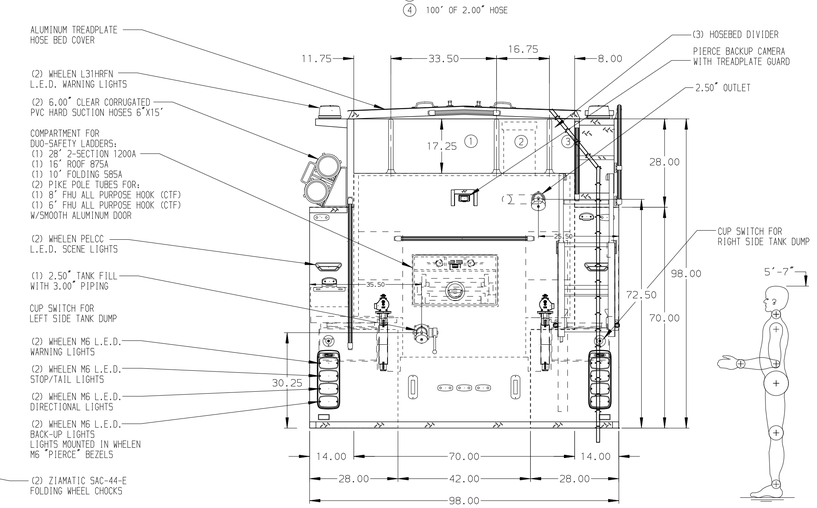

ALUMINUM BODY | MAXIMUM O.A.L. 424.00" | MAXIMUM O.A.H. 131.00" | SIDE ROLL AND FRONTAL IMPACT PROTECTION

NOTE

DIMENSIONS SHOWN ARE APPROXIMATE AND ARE SUBJECT TO MINOR DEVIATIONS AS MAY OCCUR OR BE NECESSARY IN CONSTRUCTION.
MINOR DETAILS NOT SHOWN.

1. BATTERY CHARGER LOCATED BEHIND DRIVER'S SEAT
2. BATTERY CHARGER INDICATOR LOCATED ON DRIVER'S SEAT RISER
3. 12V L.E.D. LIGHT STRIPS ON HOSE BED COVER
4. PULL STRAPS FOR DOORS IN COMPARTMENTS LS1,LS2,LS3,LS4,RS1,RS2,RS3,RS4
5. ONE FULL WIDTH/DEPTH ADJUSTABLE SHELF IN COMPARTMENTS LS2,LS4,RS1,RS2,TWO IN LS1
6. ONE FLOOR MOUNTED SLIDE-OUT TRAY WITH 2.00" SIDES IN COMPARTMENTS LS1,RS1,RS4
7. PAC TRAC ON BACK WALL OF COMPARTMENTS LS1,RS1,RS2
8. ONE ADJUSTABLE VERTICAL PARTITION IN COMPARTMENT RS4
9. THREE AIR BOTTLE HOLDERS WITH TRACKS IN COMPARTMENTS LS3,RS3
10. CIRCUIT BREAKER PANEL IN COMPARTMENT LS3
11. FIVE PVC STORAGE TUBES LOCATED IN COMPARTMENT RS4

REV	DATE	BY	CH
4	06JAN22	JWO	NPE
3	10SEP21	JWO	NPE
2	23JUL21	JWO	NPE
1	28APR21	JWO	NPE

CHASSIS DATA
MAKE: PIERCE
MODEL: ENFORCER

Pierce MANUFACTURING INC.

TITLE: 1500-D-2000D,232",FULL HEIGHT,FDLER L.S. & R.S. (2) X-LAYS,(1) DEAD-LAY,DELUGE,HOSE REEL
FOR: BERLIN BERLIN, CONNECTICUT
DWG NO.: 36238AD

JOB NO.	36238
SCALE 1:24	DATE
DRAWN BY JWO	20APR21
CHECKED BY NPE	20APR21
SHEET SIZE D	SHEET NO. 1 OF 1

View File Created 07-JAN-2022 07:03:31