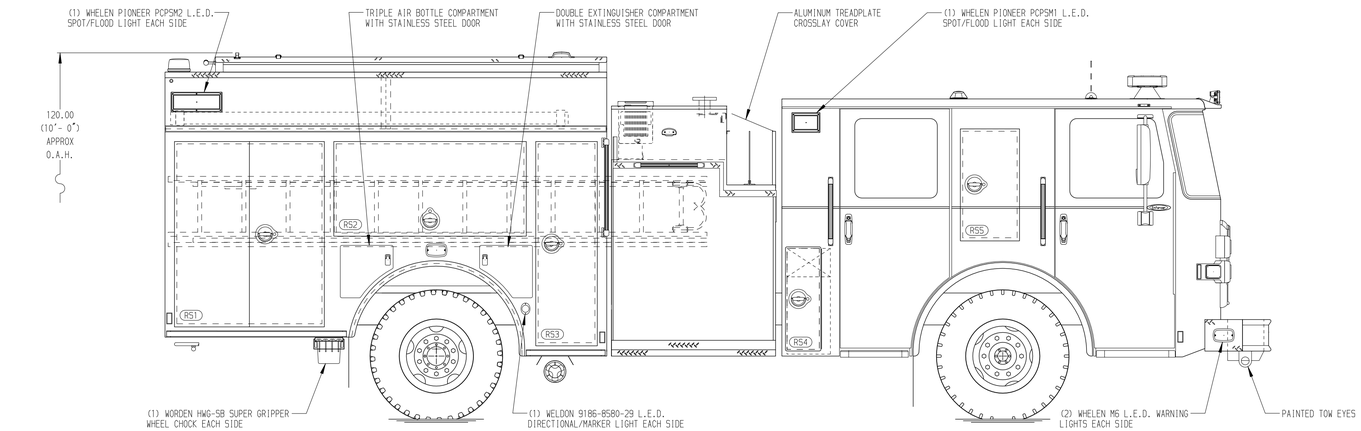


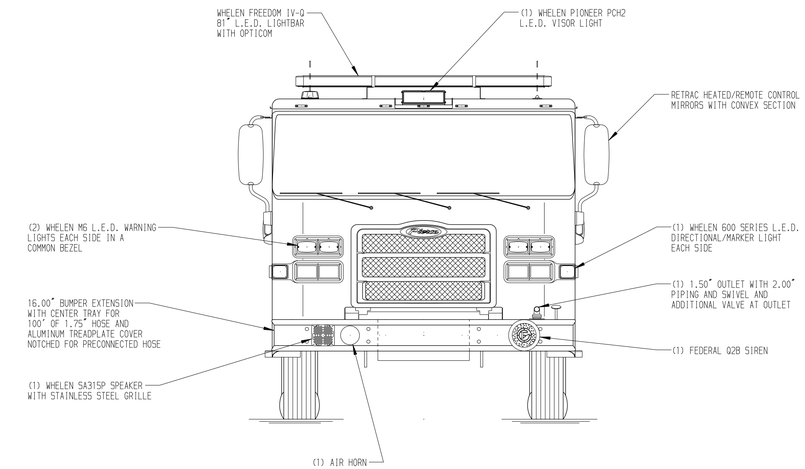


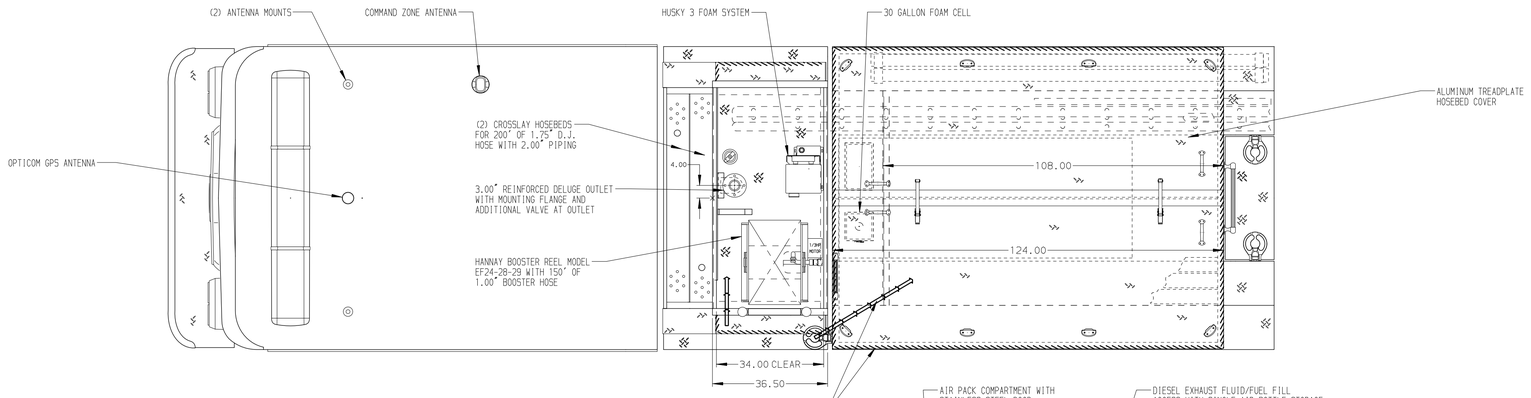


HOSEBED CAPACITIES

1. (2) HOTEL PACKS 100' OF 1.75" D.J.POLY HOSE EACH
2. 150' OF 2.50" D.J. POLY HOSE
3. 1000' OF 5.00" D.J. POLY HOSE
4. 300' OF 3.00" D.J. POLY HOSE

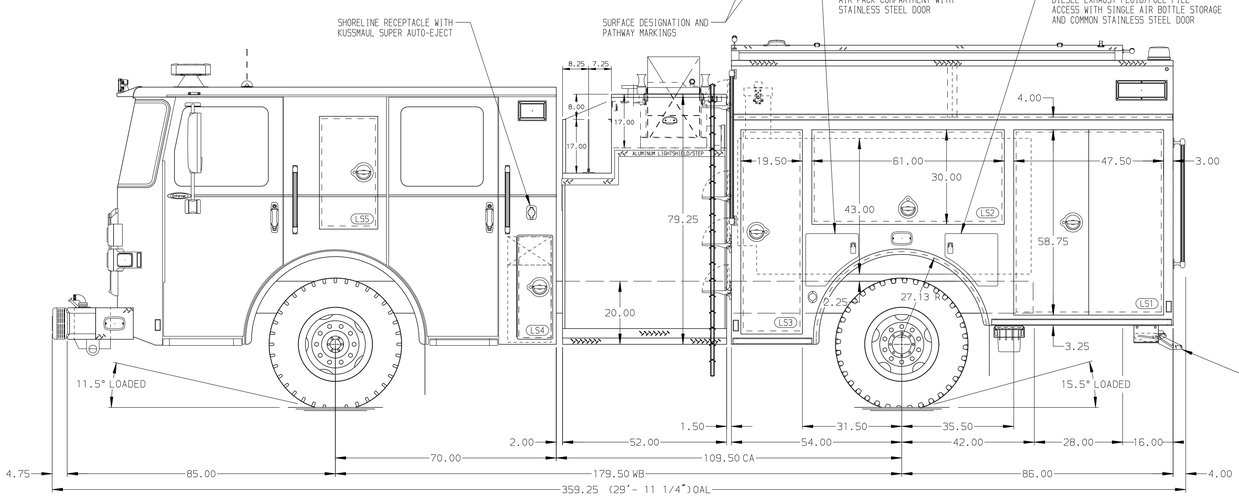


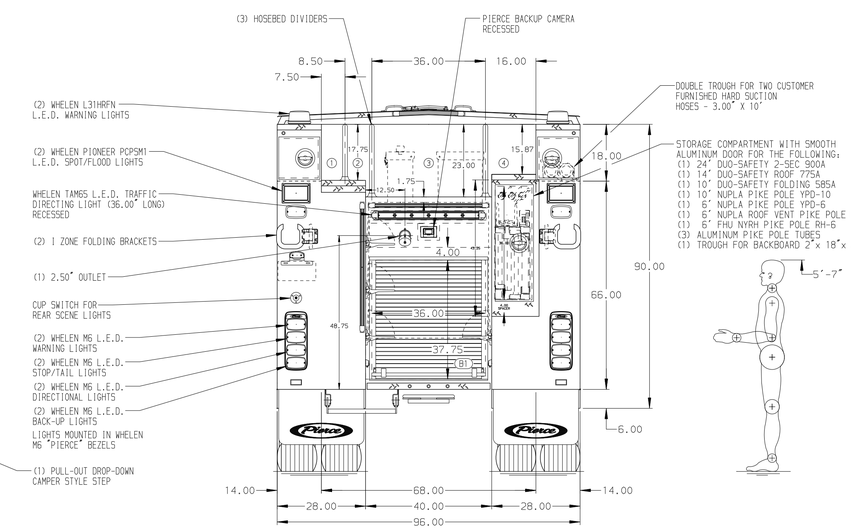


GALVANNEAL

MAXIMUM O.A.H. 144.00"

SIDE ROLL AND FRONTAL IMPACT PROTECTION

NOTE

DIMENSIONS SHOWN ARE APPROXIMATE AND ARE SUBJECT TO MINOR DEVIATIONS AS MAY OCCUR OR BE NECESSARY IN CONSTRUCTION.
MINOR DETAILS NOT SHOWN.

1. BATTERY CHARGER INDICATOR LOCATED ON DRIVER'S SEAT RISER
2. DUAL L.E.D. LIGHT STRIPS LOCATED IN HOSE BED
3. REVERSED HINGED DOOR ON COMPARTMENT LS3
4. DRIP PAN GUARD FOR ROLL-UP DOOR LOCATED B1
5. KEYED LOCK FOR LATCH FOR COMPARTMENTS LS1, LS2, LS3, RS1, RS2 AND RS3
6. EIGHT FULL WIDTH/DEPTH ADJUSTABLE SHELVES LOCATED PER SHOP ORDER
7. ONE FLOOR MOUNTED SLIDE-OUT TRAY IN COMPARTMENTS LS1 AND LS3
8. SWING-OUT TOOL BOARD IN COMPARTMENT LS2
9. PARTITION BETWEEN COMPARTMENTS LS1/B1 AND RS1/B1
10. ONE ALUMINUM MOUNTING PLATE IN COMPARTMENT LS2
11. HORIZONTAL EQUIPMENT MOUNTING TRACKS IN COMPARTMENT LS2
12. AIR INLET/OUTLET WITH DISCONNECT FITTING ON LEFT SIDE PUMP PANEL
13. STAINLESS STEEL DOOR SCUFFPLATE INSIDE COMPARTMENTS LS1, LS3, RS1 AND RS3
14. ONSPOT AUTOMATIC TIRE CHAINS TO BE PROVIDED AT REAR
15. ONE ADJUSTABLE SLIDE-OUT TRAY IN COMPARTMENT LS3

| REV | DATE | BY | CH |
|---|---|---|---|
| V | 27SEP21 | JRO | DTJ |
| V | 19AUG21 | JRO | PJP |
| V | 11JUN21 | JRO | WKL |

CHASSIS DATA
MAKE: PIERCE
MODEL: ENFORCER

Pierce MANUFACTURING INC.

TITLE: 1500-500 WATER/30 FOAM, 140" BODY, SIDE CONTROL LADDERS BETWEEN TANK & SS, CROSSLAYS, DELUGE

FOR: NEVADA COUNTY CONSOLIDATED FIRE DISTRICT GRASS VALLEY, CALIFORNIA

DWG NO.: 36280AD

| JOB NO. | 36280 |
|---|---|
| SCALE | 1:24 |
| DATE | |
| DRAWN BY | JRO 09JUN21 |
| CHECKED BY | WKL 9JUN21 |
| SHEET SIZE | D |
| SHEET NO. | 1 OF 1 |

View File Created 01-NOV-2021 10:54:51