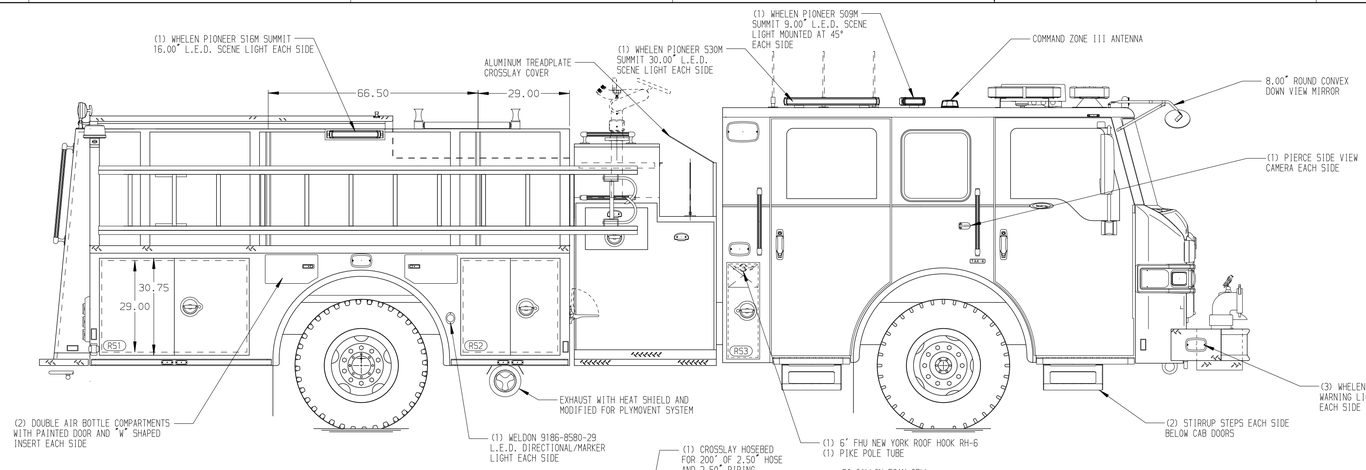

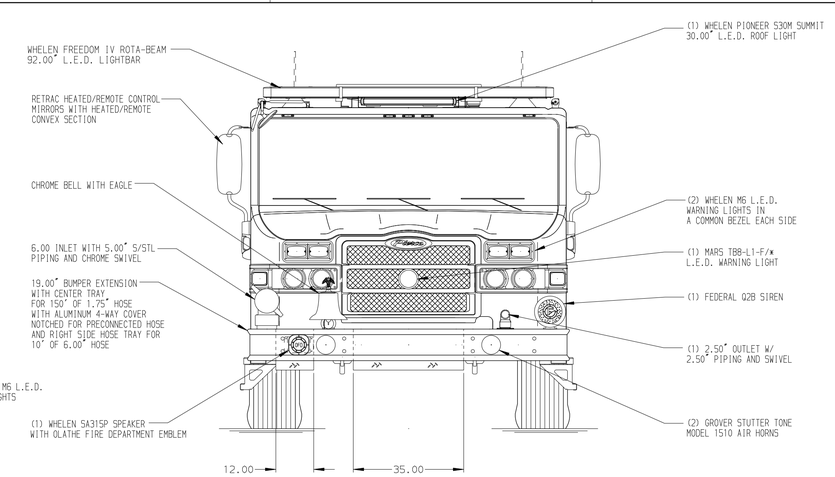

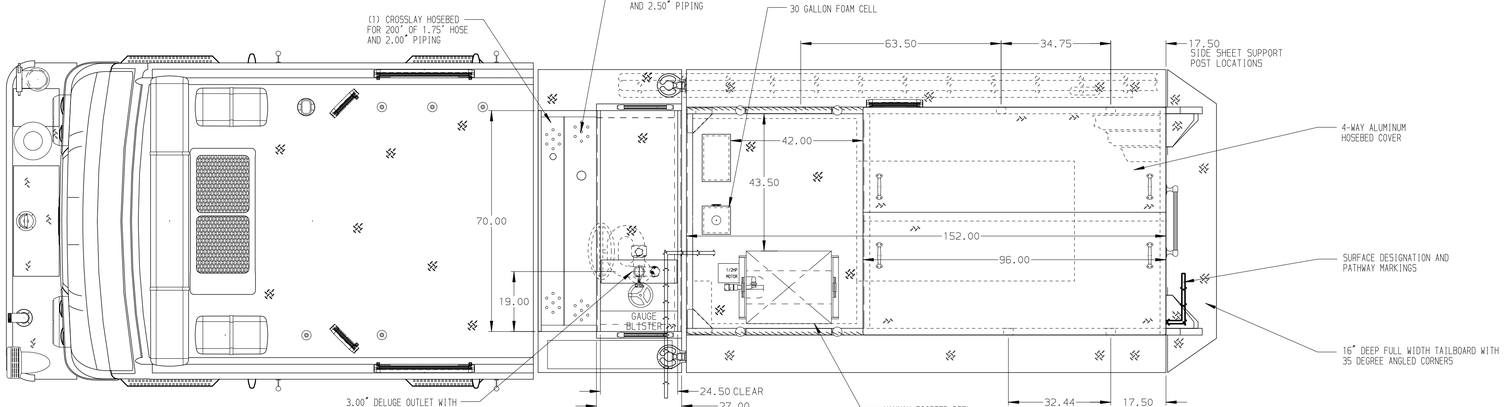

HOSEBED CAPACITIES

1. 200' OF 1.75" D.J. POLY HOSE
2. 1000' OF 4.00" D.J. POLY HOSE
3. 700' OF 2.50" D.J. POLY HOSE
4. 200' OF 2.50" D.J. POLY HOSE

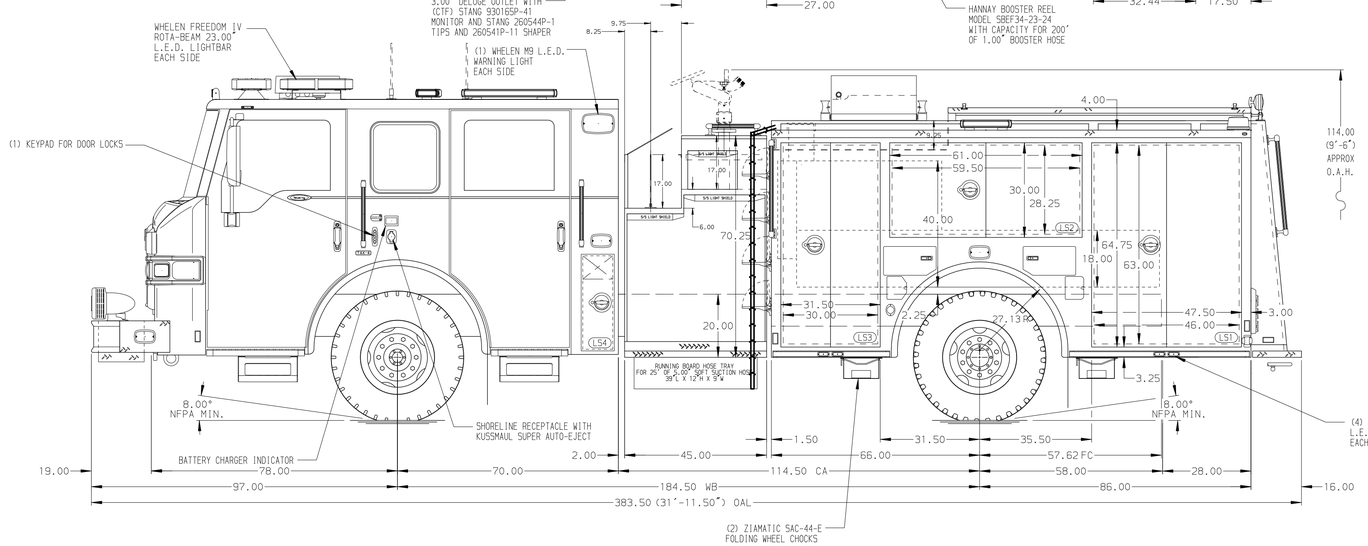

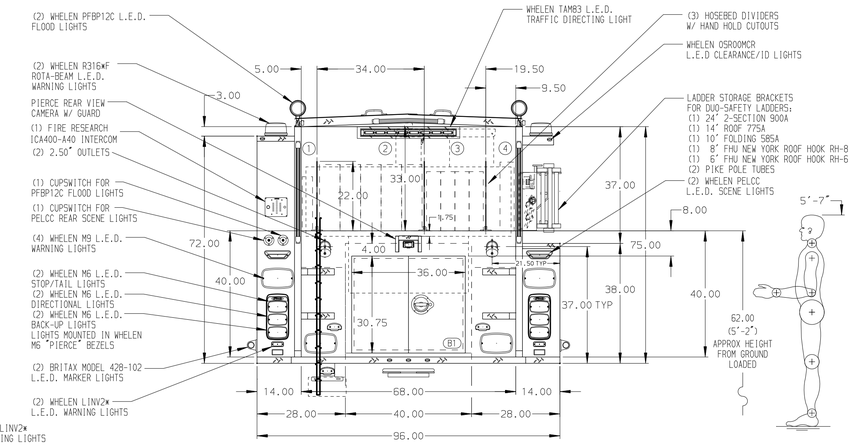

ALUMINUM BODY

SIDE ROLL AND FRONTAL IMPACT PROTECTION

NOTE

DIMENSIONS SHOWN ARE APPROXIMATE AND ARE SUBJECT TO MINOR DEVIATIONS AS MAY OCCUR OR BE NECESSARY IN CONSTRUCTION.
MINOR DETAILS NOT SHOWN.

1. RUD AUTOMATIC TIRE CHAINS TO BE PROVIDED AT REAR
2. AIR INLET W/ DISCONNECT FITTING LOCATED ON DS PUMP PANEL
3. AIR OUTLET W/ SHUT OFF VALVE LOCATED ON DS PUMP PANEL
4. VOGEL LUBE SYSTEM PUMP LOCATED PER SHOP ORDER
5. BATTERY CHARGER LOCATED BEHIND DRIVER'S SEAT
6. TWO AMOOR DUAL L.E.D. STRIP LIGHTS LOCATED BELOW HOSEBED COVER
7. TWO AMOOR L.E.D. STRIP LIGHTS IN THE INTERIOR CARGO AREA
8. STORAGE COMPARTMENT RS3/LS4: THE UPPER SECTION SHALL BE 9.50"W x 13.12"H x 26.25"(DRIVER SIDE) AND 24.00"D (PASENGER SIDE). THE TOP 7.38" OF THE UPPER COMPARTMENT SHALL BE FULL WIDTH (TRANSVERSE) OF THE CREW CAB. THE LOWER SECTION ON BOTH SIDES SHALL BE 9.50"W x 16.50"H x 22.00"D.

REV	DATE	BY	CH
3	07OCT21	SAM	CWI
2	08SEP21	SAM	CWI
1	20JUL21	SAM	CZA

CHASSIS DATA
MAKE: PIERCE
MODEL: VELOCITY

Pierce MANUFACTURING INC.

TITLE: 2000-D-550P, 520G WATER/30G FOAM, 152" BODY (2) CROSSLAYS, DELUGE, BOOSTER REEL, LADDER BRACKETS
FOR: OLATHE FIRE DEPARTMENT, OLATHE, KANSAS
DWG NO.: 36288AD-SH1

JOB NO.	36288
SCALE	1:24
DRAWN BY	SAM
DATE	26MAR21
CHECKED BY	CZA
DATE	29MAR21
SHEET SIZE	D
SHEET NO.	1 OF 2

View File Created 07-OCT-2021 13:14:12