RIGHT SIDE COMPARTMENTS CONTAIN THE FOLLOWING:

COMPARTMENT RS1 CONTAINS:
- (1) VERTICAL COMPARTMENT DIVIDER
- (1) RACK FOR 7 SCBA BOTTLES
- (1) CASCADE SYSTEM CONTROL PANEL
- (1) "SPACESAVER" 4-BOTTLE FILL ENCLOSURE
- (1) BREATHING AIR BOOSTER PUMP
- (1) FLAT TOP ADJ SHELF

COMPARTMENT RS2 CONTAINS:
- (1) RACK FOR 8 SCBA BOTTLES
- (1) RACK FOR 5 AIR BAGS
- (1) STD DEPTH SLIDE OUT TOOLBOARD
-

COMPARTMENT RS3 CONTAINS:
- (1) STD DEPTH ADJ SLIDE OUT/TILT TRAY
- (1) STD DEPTH ADJ SLIDE OUT TRAY
- (2) FLAT TOP ADJUSTABLE SHELVES
-

COMPARTMENT RS4 CONTAINS:
- (1) FLOOR MOUNTED TRAY
- (1) STD DEPTH ADJ SLIDE OUT/TILT TRAY
- (1) STD DEPTH ADJ SLIDE OUT TRAY
- (2) 20A,120V T.L. RECEPTACLES
-
-

COMPARTMENT RS5 CONTAINS:
- (2) 2-WAY ADJ SLIDE OUT TRAYS
- (3) DIVIDERS IN UPPER TRAY
- (1) HORIZONTAL FLOOR EXTENSION
-
-
-
-

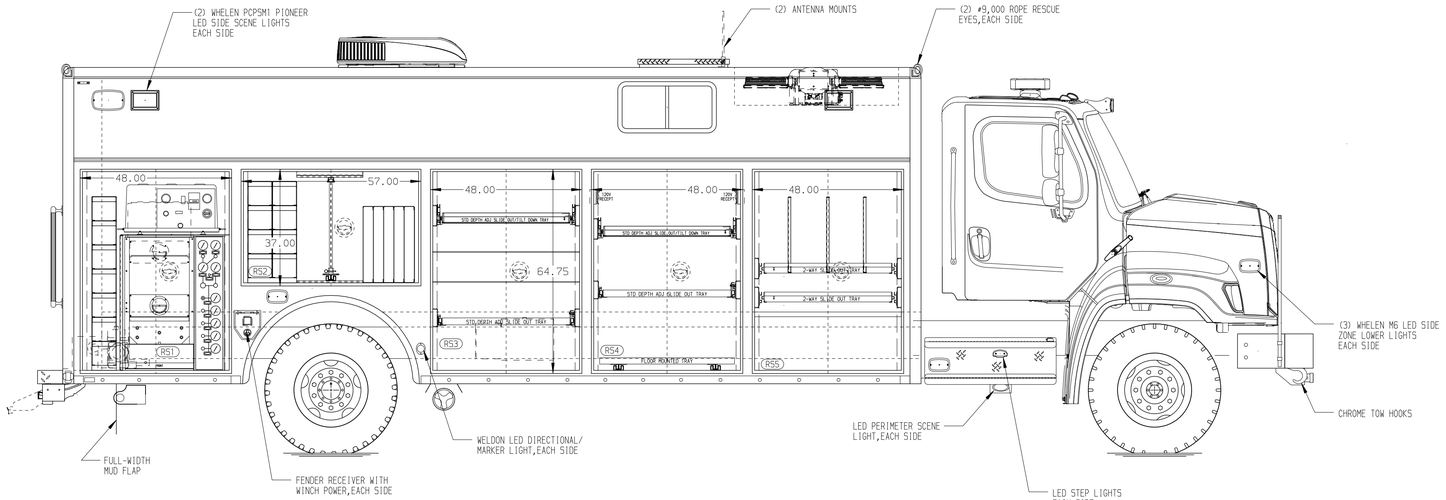

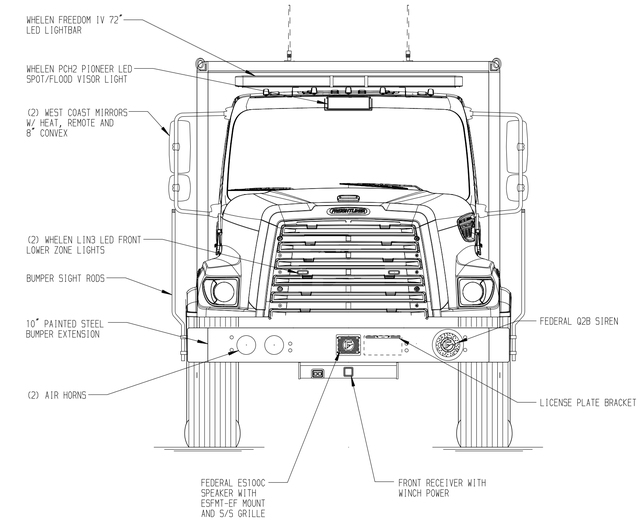

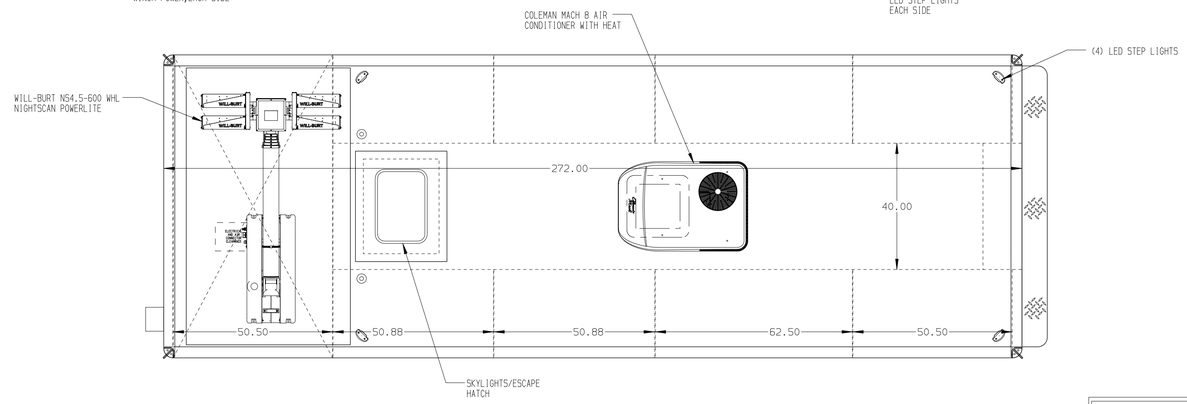

LEFT SIDE COMPARTMENTS CONTAIN THE FOLLOWING:

COMPARTMENT LS1 CONTAINS:
- (1) FLOOR MOUNTED TRAY
- (1) STD DEPTH ADJ SHELF
- (1) GENERATOR METER PANEL
- (1) NIGHT SCAN CONTROLLER
- (1) CIRCUIT BREAKER PANEL
-

COMPARTMENT LS2 CONTAINS:
- (1) STD DEPTH ADJ SLIDE OUT/TILT TRAY
- (1) STD DEPTH ADJ SLIDE OUT TRAY
-
-

COMPARTMENT LS3 CONTAINS:
- (3) STD DEPTH ADJ SHELVES
- (1) STD DEPTH ADJ SLIDE OUT/TILT TRAY
-
-

COMPARTMENT LS4 CONTAINS:
- (3) STD DEPTH ADJ SHELVES
-
-
-

COMPARTMENT LS5 CONTAINS:
- (2) 2-WAY ADJ SLIDE OUT TRAYS
- (3) DIVIDERS IN UPPER TRAY
- (1) HORIZONTAL FLOOR EXTENSION
- (1) ELECTRIC CORD REEL WITH 200' OF 10/3 YELLOW CORD
- (1) IOTA 45 AMP CHARGER
-
-
-
-
-

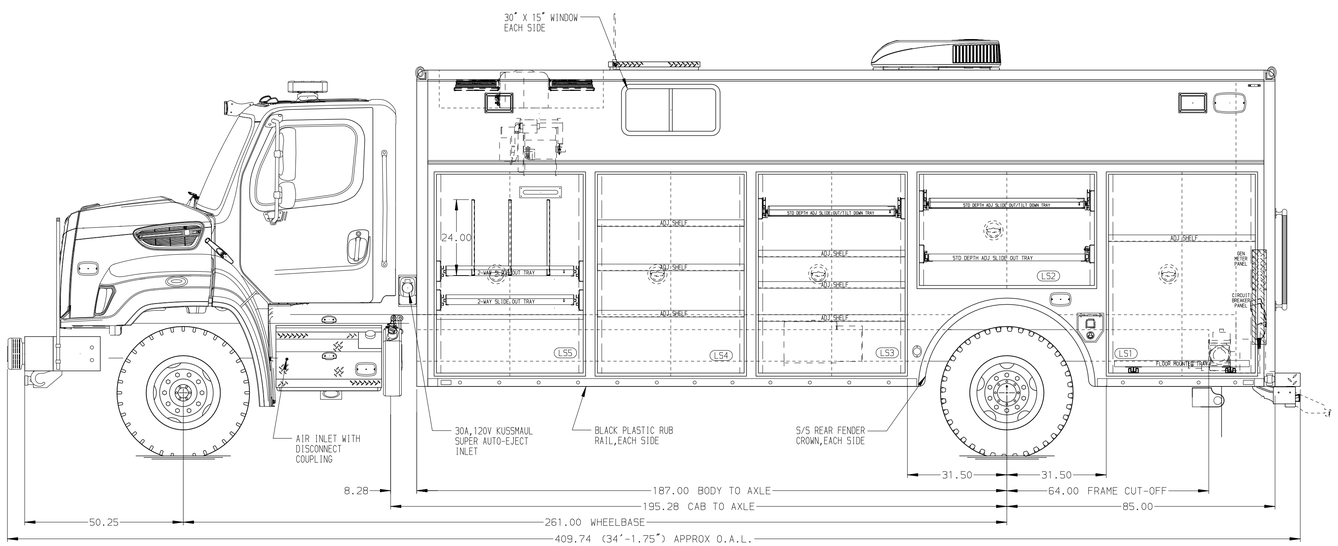

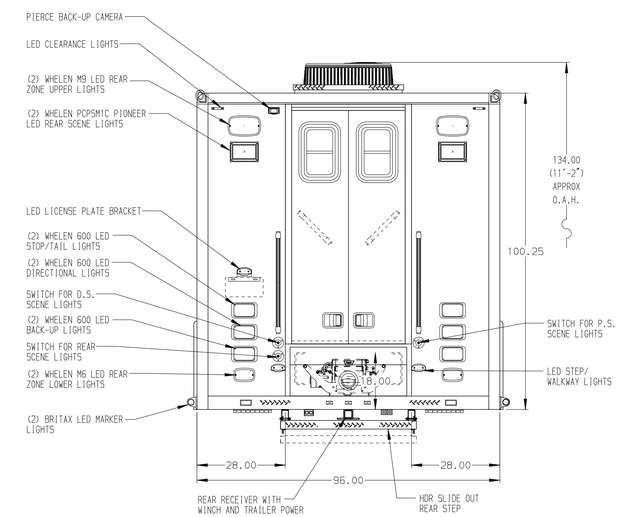

NOTE

DIMENSIONS SHOWN ARE APPROXIMATE AND ARE SUBJECT TO MINOR DEVIATIONS AS MAY OCCUR OR BE NECESSARY IN CONSTRUCTION.
MINOR DETAILS NOT SHOWN.

NOTES:
1. ONAN 25kW SINGLE PHASE PTO DRIVEN GENERATOR LOCATED BETWEEN THE FRAME RAILS
2. PIERCE LED LIGHTS IN ALL BODY COMPARTMENTS
3. ONSPOT AUTOMATIC TIRE CHAINS

NOTE:
LAP DOORS HAVE BEEN SHOWN IN HIDDEN LINES TO CLEARLY IDENTIFY THE EQUIPMENT IN EACH COMPARTMENT. DASHED LINES ON SIDES ARE DOORS IN OPEN POSITION

CLEAR DOOR WIDTH KEY

AMDOR ROLL UP DOORS:	-2 1/4"
GORTITE ROLL UP DOORS:	-2 1/2"
PIERCE DOUBLE LAP DOORS:	-4 1/4"
PIERCE LIFT-UP LAP DOORS:	-1 1/2"

(EX: 60"F-F - 2 1/4"= 57 3/4" CLEAR)
(F-F)= FRAME TO FRAME

REV	DATE	BY	CH
D	29DEC21	DHE	CDK
C	12NOV21	DHE	CDK
B	26JUL21	DHE	CDK
A	22JUL21	DHE	CDK

CHASSIS DATA
MAKE: FREIGHTLINER
MODEL: 108SD
DWG NO.: 36343AD-SH1

Pierce MANUFACTURING INC.

TITLE: HEAVY DUTY RESCUE WALKIN
FOR: WOBURN FIRE DEPARTMENT BID #559
PATRICK WHITNEY

JOB NO.	36343
SCALE 1:24	DATE
DRAWN BY DHE	14JUL21
CHECKED BY CDK	16JUL21
SHEET SIZE D	SHEET NO. 1 OF 1

View File Created 06-JAN-2022 10:55:05