RIGHT SIDE COMPARTMENTS
CONTAIN THE FOLLOWING:

COMPARTMENT RS1 CONTAINS:
- (1) TRAY,SLIDE OUT,STD DEPTH, FLOOR MOUNTED,500# CAP.

COMPARTMENT RS2 CONTAINS:
- (2) TRAY,FLOOR MOUNTED UTILITY,2-WAY SLIDE OUT,500#,3"SIDES,FULL TRANS
- (2) TOOLBOARDS,ADDED TO SLIDE-OUT TRAY, FULL DEPTH TRANSVERSE TRAY

COMPARTMENT RS4 CONTAINS:
- (2) TRAY,FLOOR MOUNTED UTILITY,2-WAY SLIDE OUT,500#,3"SIDES,FULL TRANS
- (2) TOOLBOARDS,ADDED TO SLIDE-OUT TRAY, FULL DEPTH TRANSVERSE TRAY
- (1) TRAY,SLIDE OUT,TILT 30°, STD DEPTH COMPT,200# CAP.
- (1) EXTENDED COMPARTMENT FLOOR BOLT IN STYLE

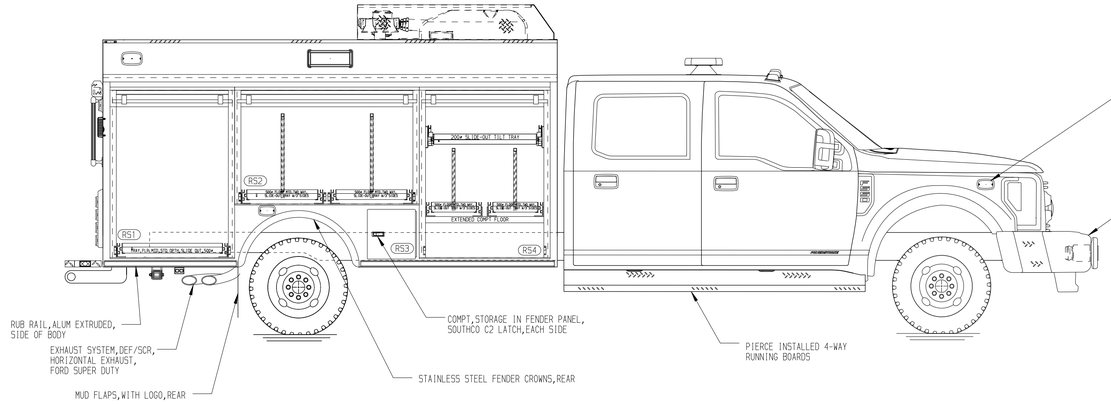

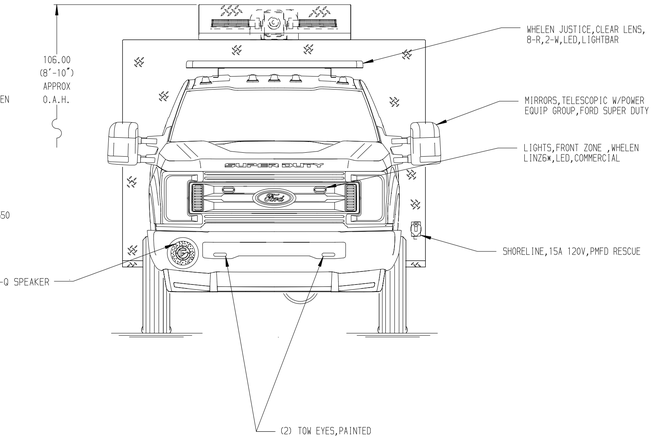

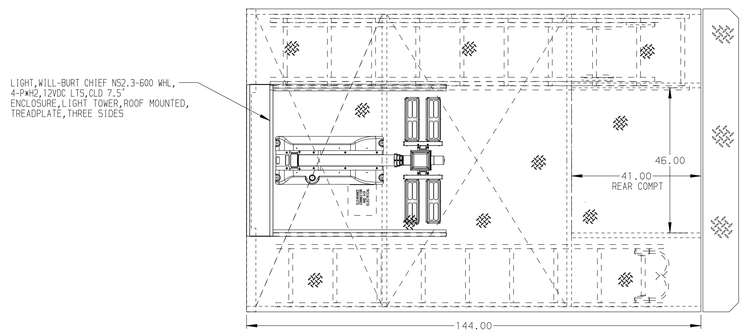

REAR COMPARTMENT B1 CONTAINS
THE FOLLOWING:

COMPARTMENT B1 CONTAINS:
- (1) TRAY SLIDE OUT,STD DEPTH, FLOOR MOUNTED,500# CAPACITY
- (2) TOOLBOARDS,ADDED TO SLIDE-OUT TRAY, STD DEPTH TRAY

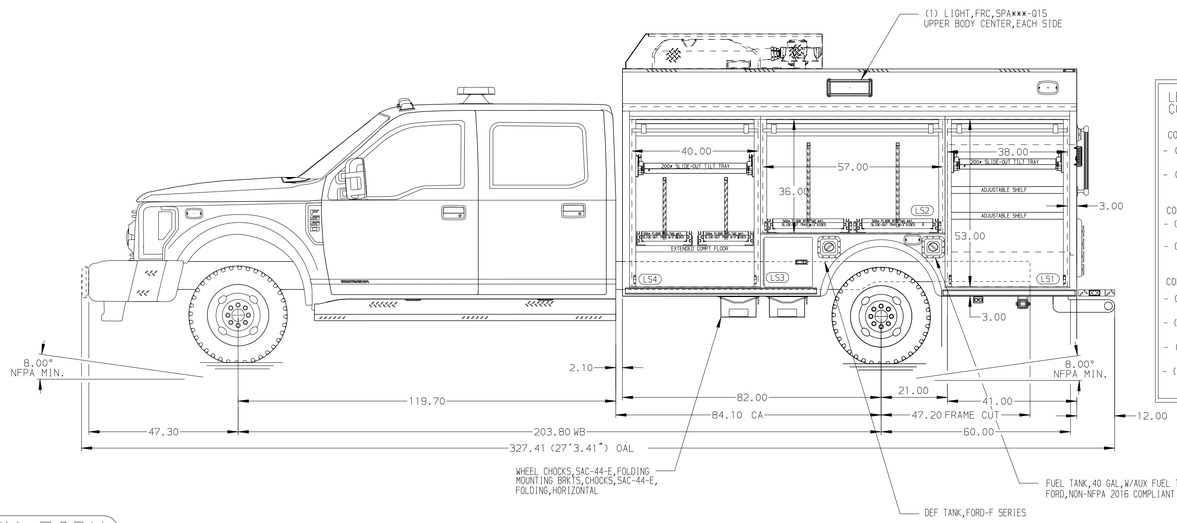

LEFT SIDE COMPARTMENTS
CONTAIN THE FOLLOWING:

COMPARTMENT LS1 CONTAINS:
- (2) SHELVES,ADJUSTABLE,500# CAP. STD DEPTH COMPT
- (1) TRAY,SLIDE OUT,TILT 30°, STANDARD DEPTH COMPT,200# CAP.

COMPARTMENT LS2 CONTAINS:
- (2) TRAY,FLOOR MOUNTED UTILITY,2-WAY SLIDE OUT,500#,3"SIDES,FULL TRANS
- (2) TOOLBOARDS,ADDED TO SLIDE-OUT TRAY, FULL DEPTH TRANSVERSE TRAY

COMPARTMENT LS4 CONTAINS:
- (2) TRAY,FLOOR MOUNTED UTILITY,2-WAY SLIDE OUT,500#,3"SIDES,FULL TRANS
- (2) TOOLBOARDS,ADDED TO SLIDE-OUT TRAY, FULL DEPTH TRANSVERSE TRAY
- (1) TRAY,SLIDE OUT,TILT 30°, STANDARD DEPTH COMPT,200# CAP.
- (1) EXTENDED COMPARTMENT FLOOR BOLT IN STYLE

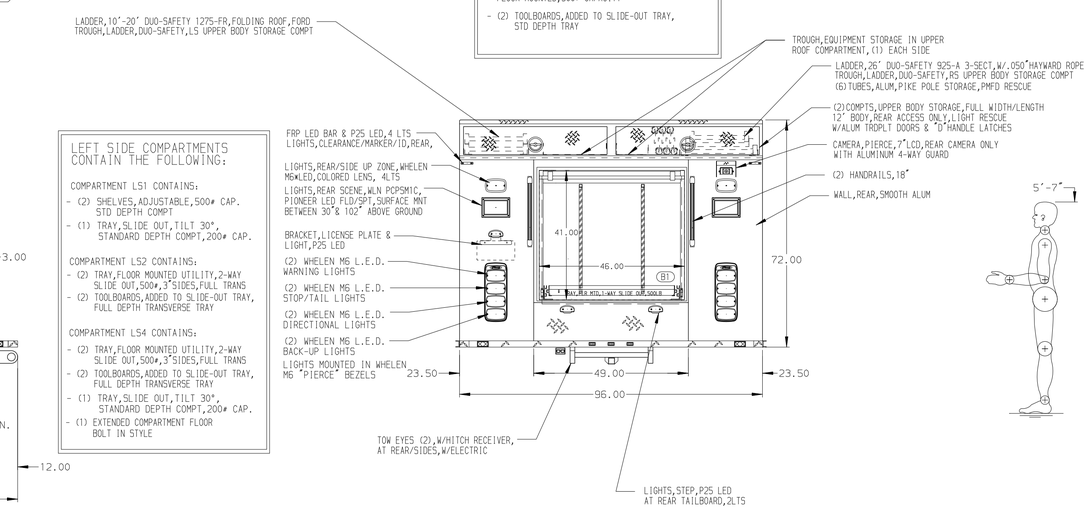

ALUMINUM BODY

NOTE
DIMENSIONS SHOWN ARE APPROXIMATE AND ARE SUBJECT TO MINOR DEVIATIONS AS MAY OCCUR OR BE NECESSARY IN CONSTRUCTION.
MINOR DETAILS NOT SHOWN.

REV.	DATE	BY	CHK'D
V	24SEP21	JLA	AJA

CHASSIS DATA
CHASSIS FORD
MODEL F-550 4X4

Pierce MANUFACTURING INC.
BRADENTON, FLORIDA

TITLE	12' RESCUE,NON-WALK-IN –	JOB NO. 36345	DATE 06JUL21
FOR	PARAGOULD FIRE DEPARTMENT PARAGOULD, ARKANSAS	SCALE 1:24	DRAWN BY JAF
DRWG. NO.	36345AD	9JUL21	CHK'D BY RWI
		SHEET NO. 1 OF 1	SHEET SIZE D

View File Created 24-SEP-2021 12:57:46