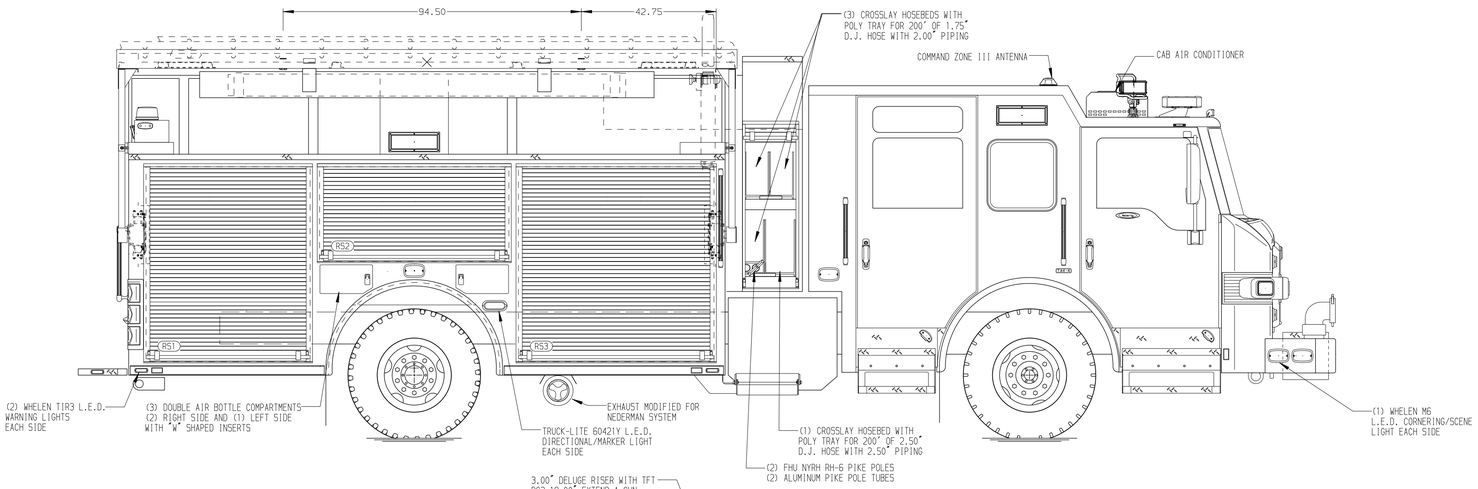

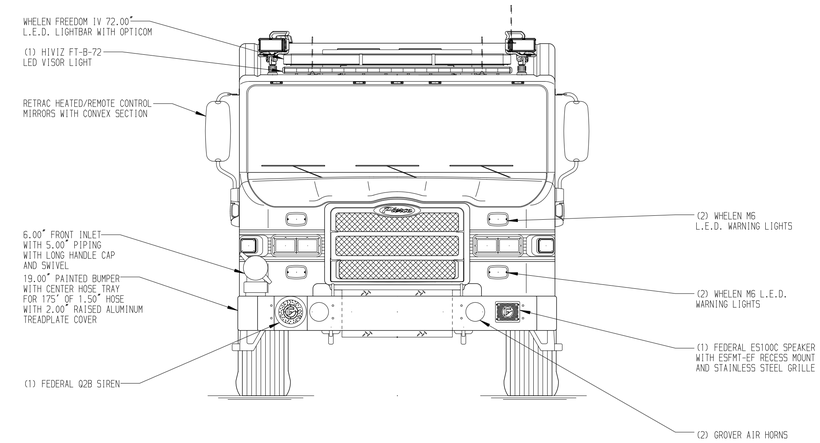

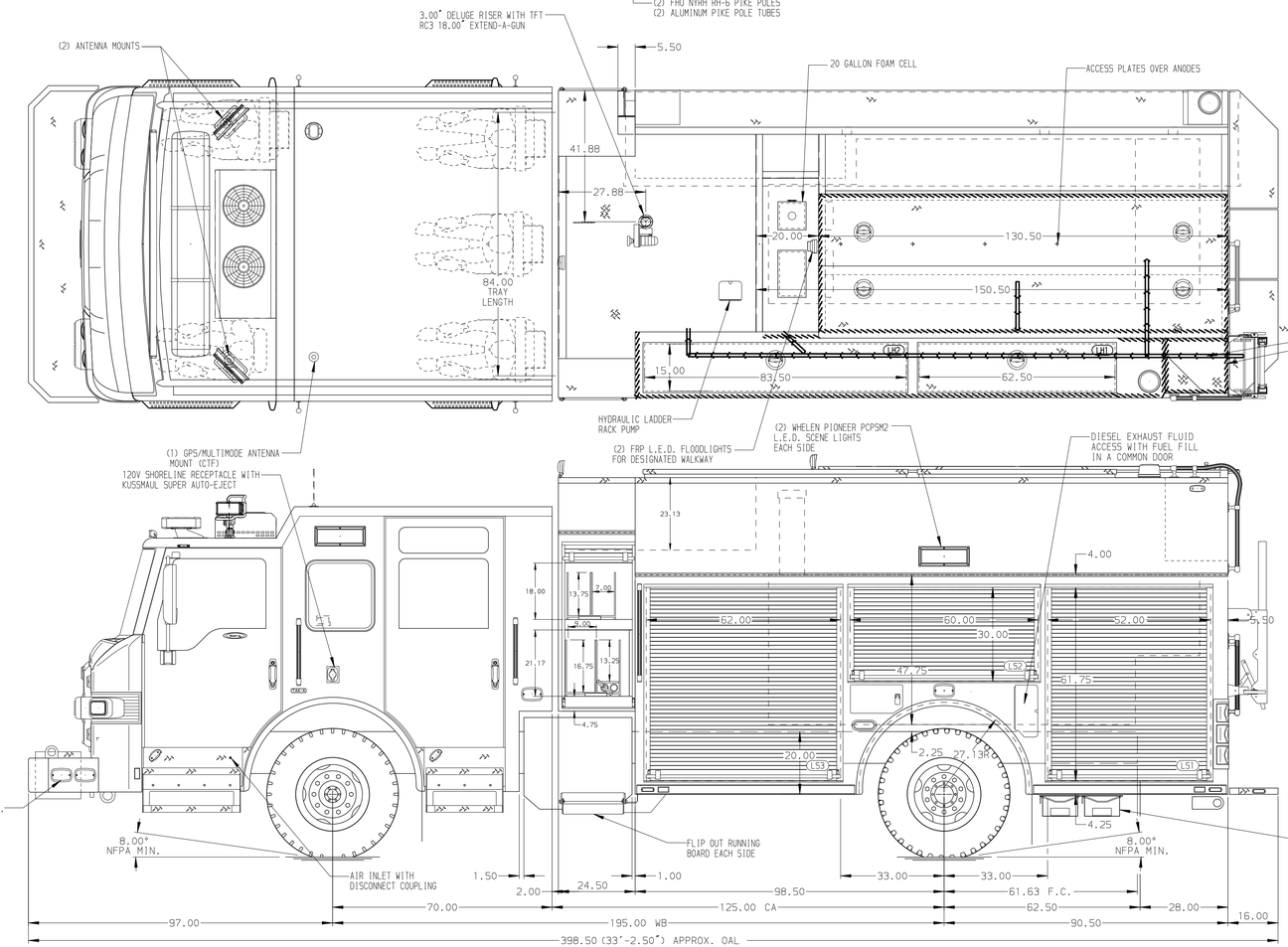

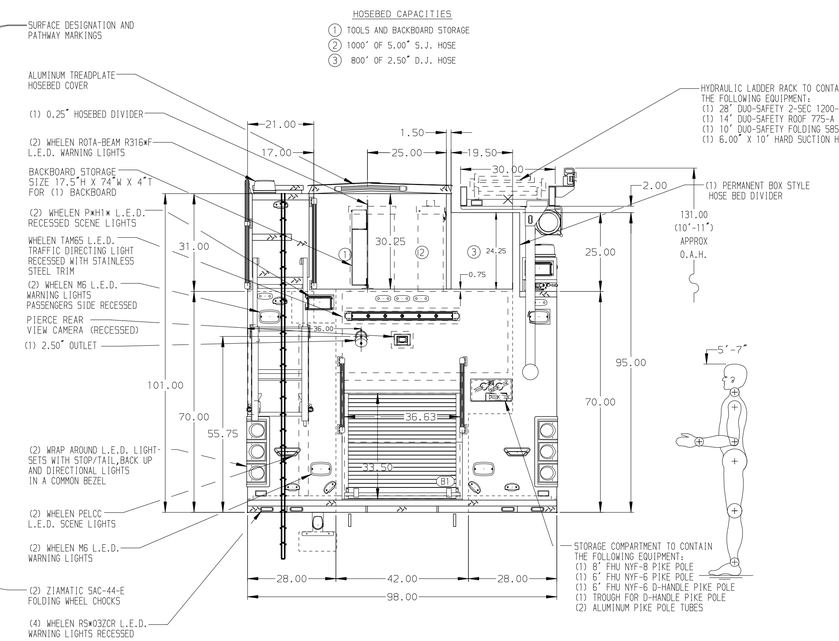

ALUMINUM BODY | MAXIMUM O.A.H. 131.00" | SIDE ROLL AND FRONTAL IMPACT PROTECTION

NOTE

DIMENSIONS SHOWN ARE APPROXIMATE AND ARE SUBJECT TO MINOR DEVIATIONS AS MAY OCCUR OR BE NECESSARY IN CONSTRUCTION.
MINOR DETAILS NOT SHOWN.

1. ONSPOT AUTOMATIC TIRE CHAINS TO BE PROVIDED AT THE REAR
2. BATTERY CHARGER LOCATED BEHIND DRIVER SEAT
3. BATTERY CHARGER INDICATOR BEHIND DRIVER'S SEAT DISPLAYED THROUGH WINDOW
4. ONE PELCB L.E.D LIGHT LOCATED IN THE FRONT OF THE HOSEBED ON THE CROSS DIVIDER
5. HUSKY 12 FOAM SYSTEM

REV	DATE	BY	CH
3	09DEC21	LME	SMA
2	11NOV21	LME	SMA
1	03SEP21	LME	SMA

CHASSIS DATA
MAKE: PIERCE
MODEL: VELOCITY FR

Pierce MANUFACTURING INC.

TITLE: 1500-D-1000P, 980G WATER W/20G FOAM CELL, 189" PUC (4) CROSSLAYS, DELUGE, HYDRAULIC LADDER RACK
FOR: SOUTH METRO FIRE RESCUE AUTHORITY PARKER, COLORADO
DWG NO.: 36464AD-SH1

JOB NO.	36464 01-02
SCALE	1:24
DRAWN BY	LME
DATE	24AUG21
CHECKED BY	SMA
DATE	24AUG21
SHEET SIZE	D
SHEET NO.	1 OF 2

View File Created 10-DEC-2021 06:59:03