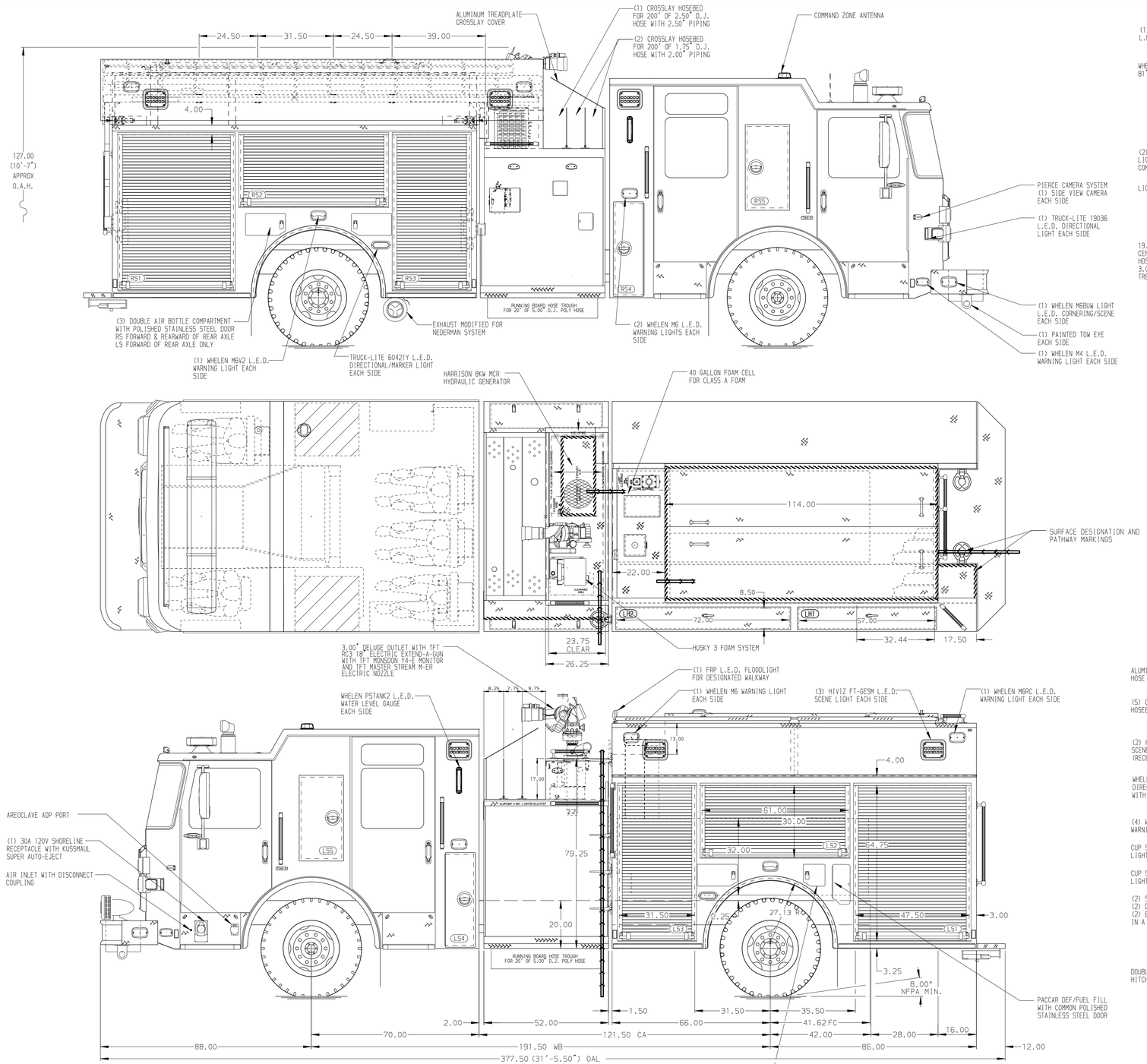

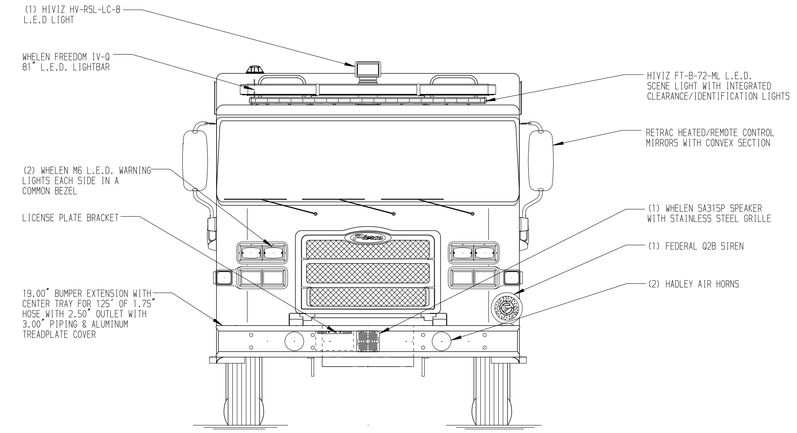

HOSEBED CAPACITIES

1. 300' OF 3.00" D.J. POLY HOSE
2. 200' OF 2.50" D.J. POLY HOSE
3. 200' OF 2.50" D.J. POLY HOSE
4. 200' OF 1.75" D.J. POLY HOSE
5. 200' OF 1.75" D.J. POLY HOSE
6. 300' OF 4.00" RUBBER HOSE (100' LENGTHS STORZ COUPLER)
7. 300' OF 4.00" RUBBER HOSE (100' LENGTHS STORZ COUPLER)

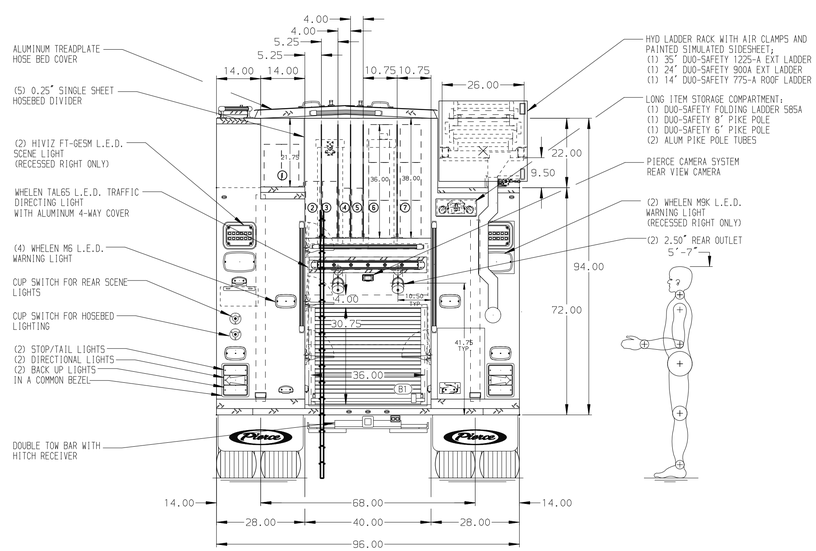

ALUMINUM BODY

FRONTAL IMPACT PROTECTION

NOTE

DIMENSIONS SHOWN ARE APPROXIMATE AND ARE SUBJECT TO MINOR DEVIATIONS AS MAY OCCUR OR BE NECESSARY IN CONSTRUCTION.
MINOR DETAILS NOT SHOWN.

1. AIR OUTLET WITH SHUT OFF VALVE LOCATED ON LEFT SIDE PUMP PANEL
2. DUAL L.E.D. LIGHT STRIPS LOCATED IN HOSE BED
3. FOUR FULL WIDTH/DEPTH ADJUSTABLE SHELVES IN COMPARTMENTS PER OPTION LIST
4. TWO ADJUSTABLE TILTING SLIDE-OUT TRAYS IN COMPARTMENTS PER OPTION LIST
5. ONE FLOOR MOUNTED SLIDE-OUT TRAY IN COMPARTMENTS LIST
6. ONE SLIDE-OUT TOOL BOARDS WITH PEGBOARD PATTERN IN COMPARTMENTS PER OPTION LIST
7. ONE PARTION BETWEEN RS1/B1
8. ONE VERTICAL PARTITION IN COMPARTMENTS PER OPTION LIST
9. CIRCUIT BREAKER PANEL IN COMPARTMENTS PER OPTION LIST
10. FOUR 120V DUPLEX RECEPTACLE LOCATED IN COMPARTMENTS PER OPTION LIST
11. ONE SLIDE OUT ADJUSTABLE TRAY IN COMPARTMENT PER OPTION LIST

REV	DATE	BY	CH
V	20DEC21	JRC	CWI
V	17DEC21	JRC	CWI
V	220CT21	JRC	PHA

CHASSIS DATA
MAKE: PIERCE
MODEL: ENFORCER

Pierce MANUFACTURING INC.

TITLE: 2000-D-440P 400G WATER, 40G FOAM, 152" PUMPER BODY (3) CROSSLAYS, HYDRAULIC EQUIPMENT RACK, DELUGE

FOR: NORTH VANCOUVER CITY FIRE DEPARTMENT
NORTH VANCOUVER, BRITISH COLUMBIA

DWG NO.: 36536AD

JOB NO.	36536
SCALE	1:24
DATE	
DRAWN BY	JRC 140CT21
CHECKED BY	PHA 180CT21
SHEET SIZE	D
SHEET NO.	1 OF 1

View File Created 20-DEC-2021 11:06:53