PUMPER

BODY
Medium Aluminum 2nd Gen Pumper

CHASSIS
Saber FR Chassis

CHASSIS

AXLE,FRONT,CUSTOM
18,000 lb Dana Axle

AXLE,REAR
24,000 lb Dana Axle

ENGINE
450 HP Cummins L9 Engine

TRANSMISSION
Allison 5th Gen, 3000 EVS P

BUMPER
Non Extended

CAB
6010 Saber FR Cab

BODY

WATER TANK
500 Gallon Poly Water Tank

COMPT,PUMPER,REAR
37.75" FF RollUp Rear Compt

COMPT,PUMPER,LEFT SIDE
136" RollUp (2) Upper

COMPT,PUMPER,RIGHT SIDE
136" RollUp Low

FIRE SUPPRESSION

PUMPHOUSE
42" Control Zone Top Mount

PUMP
2000 GPM DARLEY TSM

CROSSLAYS,1.50"
1.50" Crosslays Not Required

CROSSLAYS,2.50"
2.50" Crosslay Not Required

SPEEDLAYS
(2) 1.50" & (1) 2.50" Std. Capacity

GENERATOR
Generator Not Required

Foam System
Not Required

Foam Cell
Not Required

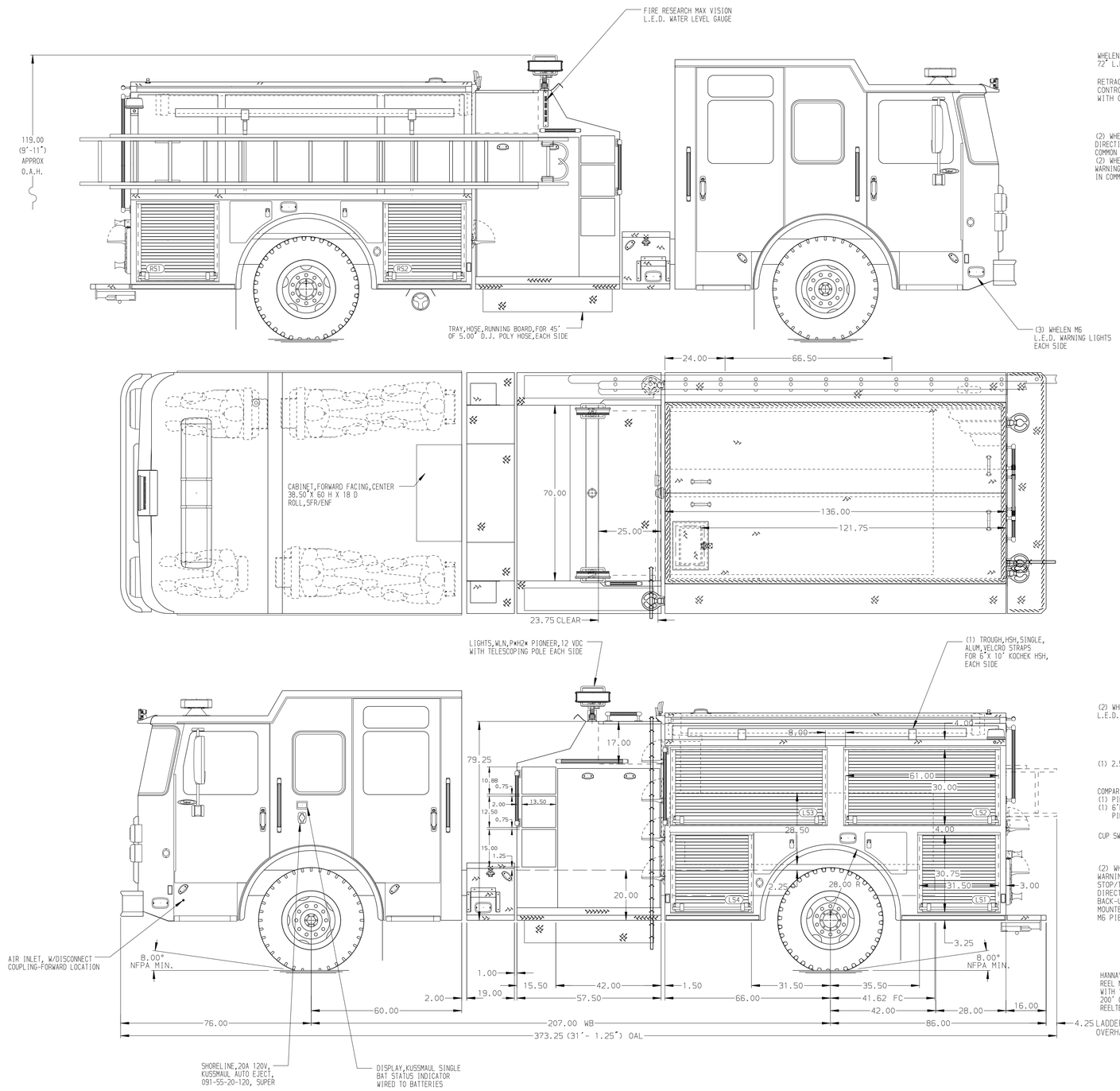

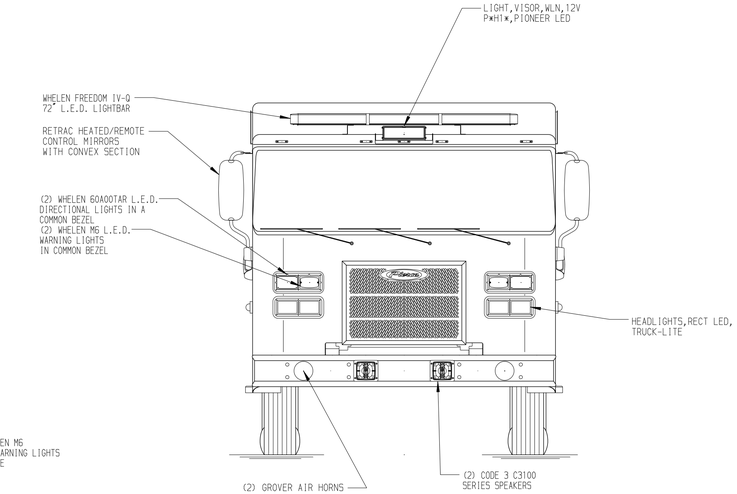

HOSEBED CAPACITY

BED 1
1000' OF 5.00" D.J. POLY HOSE

BED 2
1000' OF 2.50" D.J. POLY HOSE

BED 3
600' OF 1.75" D.J. POLY HOSE

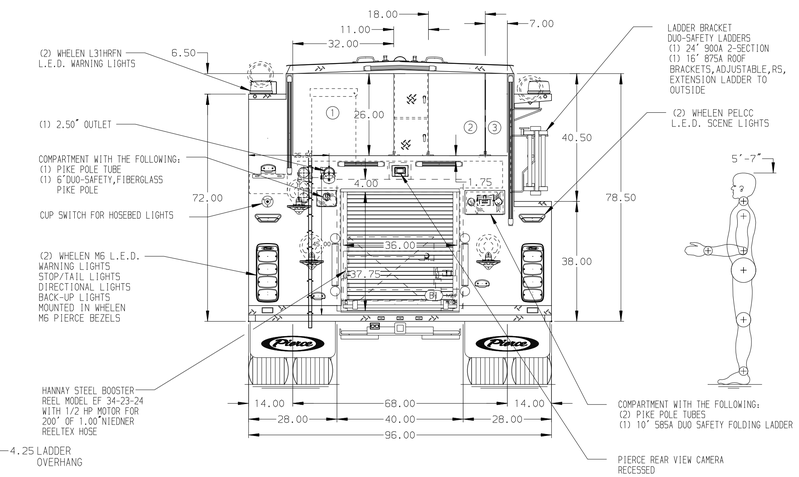

NOTE
DIMENSIONS SHOWN ARE APPROXIMATE AND ARE SUBJECT TO MINOR DEVIATIONS AS MAY OCCUR OR BE NECESSARY IN CONSTRUCTION.
MINOR DETAILS NOT SHOWN.

REV	DATE	BY	CH
B	06NOV21	RHU	GSC
A	16SEP21	RHU	GSC

CHASSIS DATA	
MAKE	PIERCE
MODEL	SABER FR
DWG NO.	36582AD

Pierce MANUFACTURING INC.

TITLE	Pierce Pumper Approval Drawing -
FOR	Akron Fire Department -

JOB NO.	36582
SCALE	1:24
DATE	
DRAWN BY	MMF 24JUN21
CHECKED BY	COL 24JUN21
SHEET SIZE	D
SHEET NO.	1 OF 1

View File Created 10-NOV-2021 09:24:45