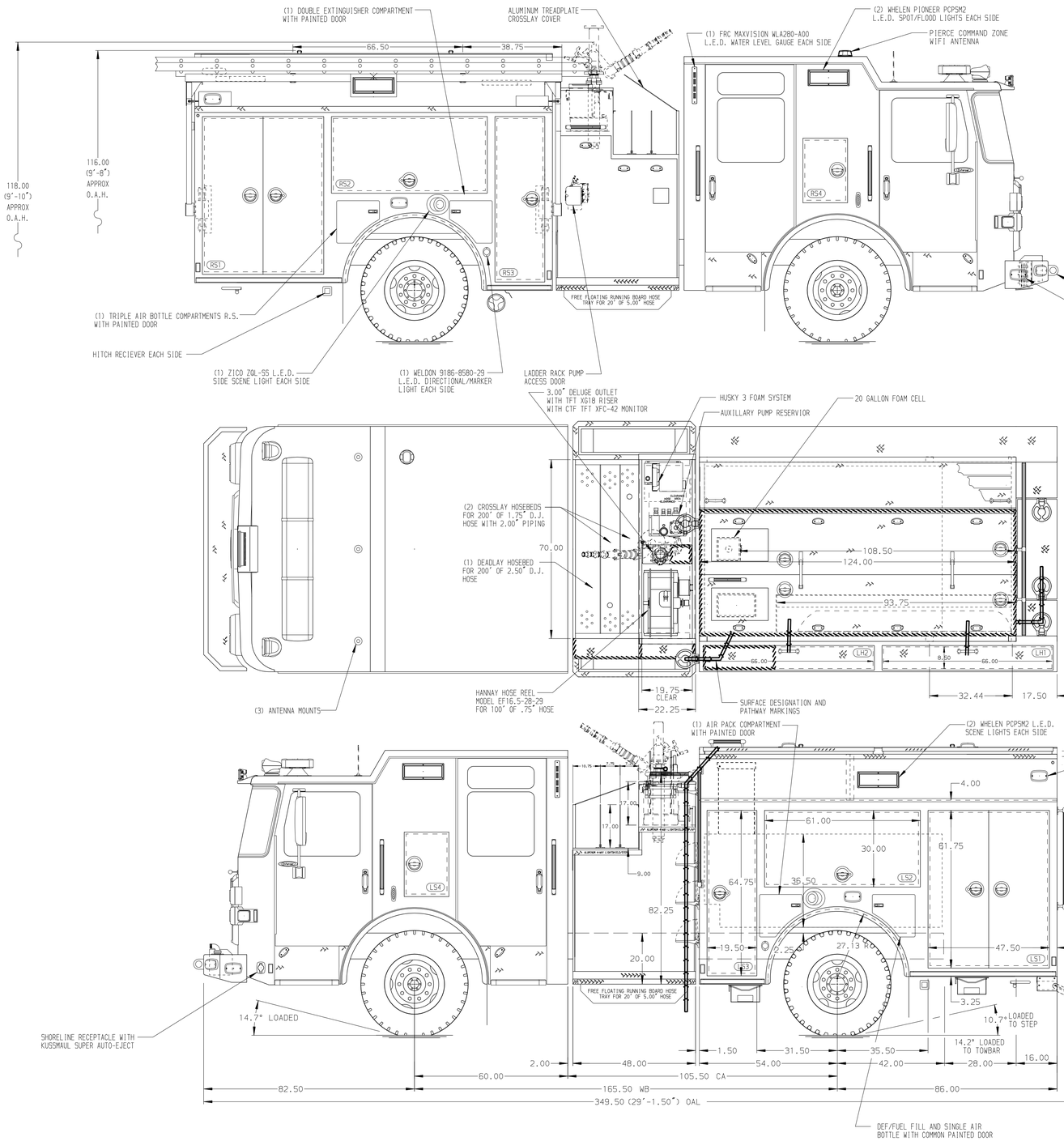

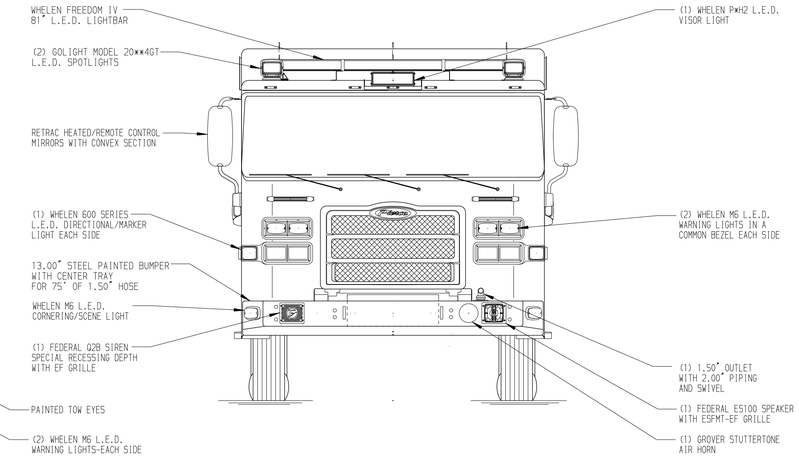

HOSEBED CAPACITIES

1 - 200' OF 1.75" HOSE
2 - 600' OF 3.00" HOSE
3 - 700' OF 4.00" HOSE

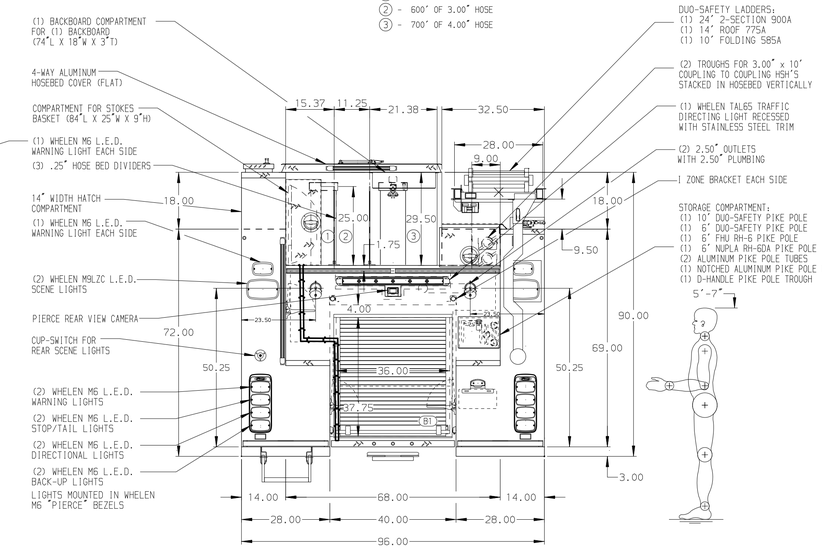

ALUMINUM BODY

SIDE ROLL AND FRONTAL IMPACT PROTECTION

NOTE

DIMENSIONS SHOWN ARE APPROXIMATE AND ARE SUBJECT TO MINOR DEVIATIONS AS MAY OCCUR OR BE NECESSARY IN CONSTRUCTION.
MINOR DETAILS NOT SHOWN.

1. BATTERY CHARGER/COMPRESSOR LOCATED IN COMPARTMENT LS3
2. BATTERY CHARGE INDICATOR LOCATED ON DRIVER'S SEAT RISER
3. REVERSED HINGED DOOR ON COMPARTMENT LS3,RS3
4. ONE FULL WIDTH/DEPTH ADJUSTABLE SHELF IN COMPARTMENTS LS2, B1,TWO IN LS1,LS3,THREE IN RS1,RS3
5. SWING-OUT TOOL BOARD IN COMPARTMENT RS2
6. ONE VERTICAL PARTITION LOCATED IN COMPARTMENT LS1
7. ONE CTECH (4) DRAWER ASSEMBLY LOCATED IN COMPARTMENT LS3
8. AIR INLET/OUTLET WITH DISCONNECT FITTING LOCATED ON LEFT SIDE PUMP PANEL
9. ONE BOLT-IN PARTITION IN COMPARMTENTS LS1/B1 & RS1/B1
10. DRIP PAN FOR ROLL-UP DOOR IN COMPARTMENT B1
11. ONE 120V RECEPTACLE LOCATED IN COMPARTMENT LS1,RS3

REV	DATE	BY	CH
2	15DEC21	JWO	COS
1	01OCT21	JWO	WKL

CHASSIS DATA
MAKE: PIERCE
MODEL: ENFORCER

TITLE: 1500-D-620P 600 WATER/20 GAL FOAM, 140" PUMPER BODY (2)XLAYS, DELUGE, HUSKY 3, HYDRAULIC LADDER RACK PS
FOR: SANTA CRUZ COUNTY/PAJARO DUNES FIRE DEPARTMENT WATSONVILLE, CALIFORNIA
DWG NO.: 36592AD

Pierce MANUFACTURING INC.

JOB NO.	36592
SCALE	1:24
DATE	
DRAWN BY	JWO
	20SEP21
CHECKED BY	EGO
	27SEP21
SHEET SIZE	D
SHEET NO.	1 OF 1

View File Created 15-DEC-2021 11:55:57