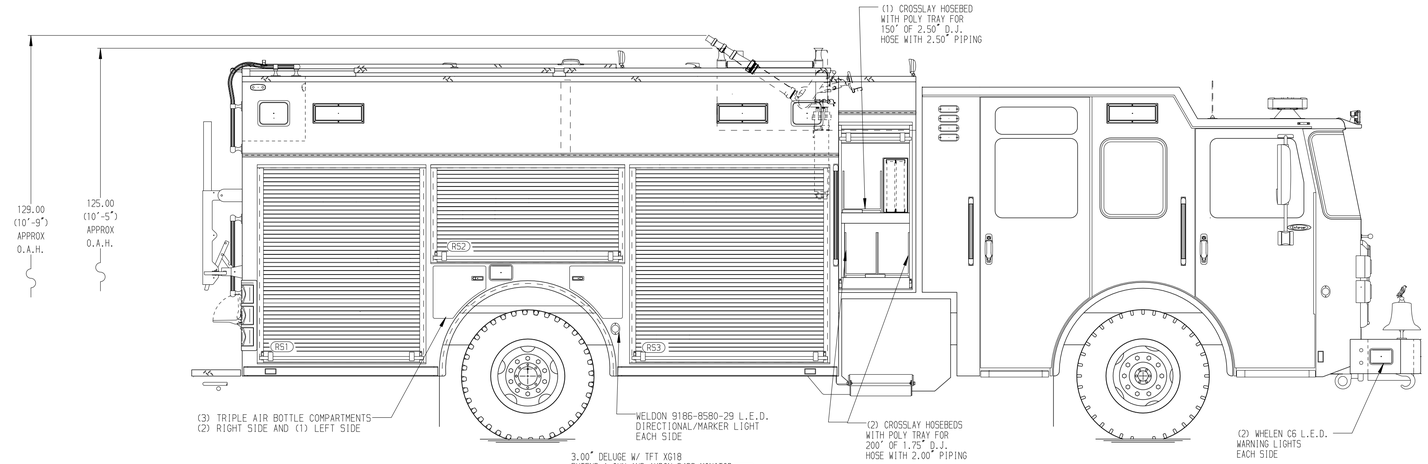

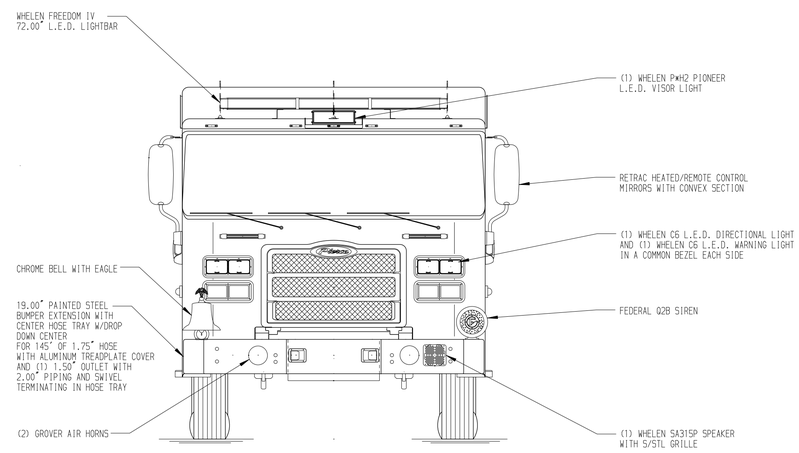

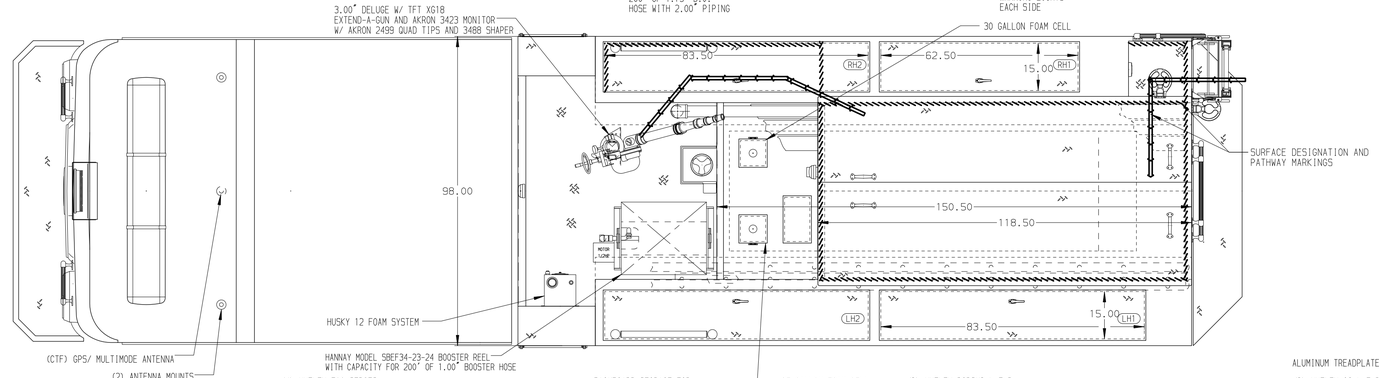

HOSEBED CAPACITIES

1. 800' OF 3.00" D.J. POLY HOSE
2. 1100' OF 5.00" NITRILE LD HOSE
3. 300' OF 1.75" D.J. POLY HOSE

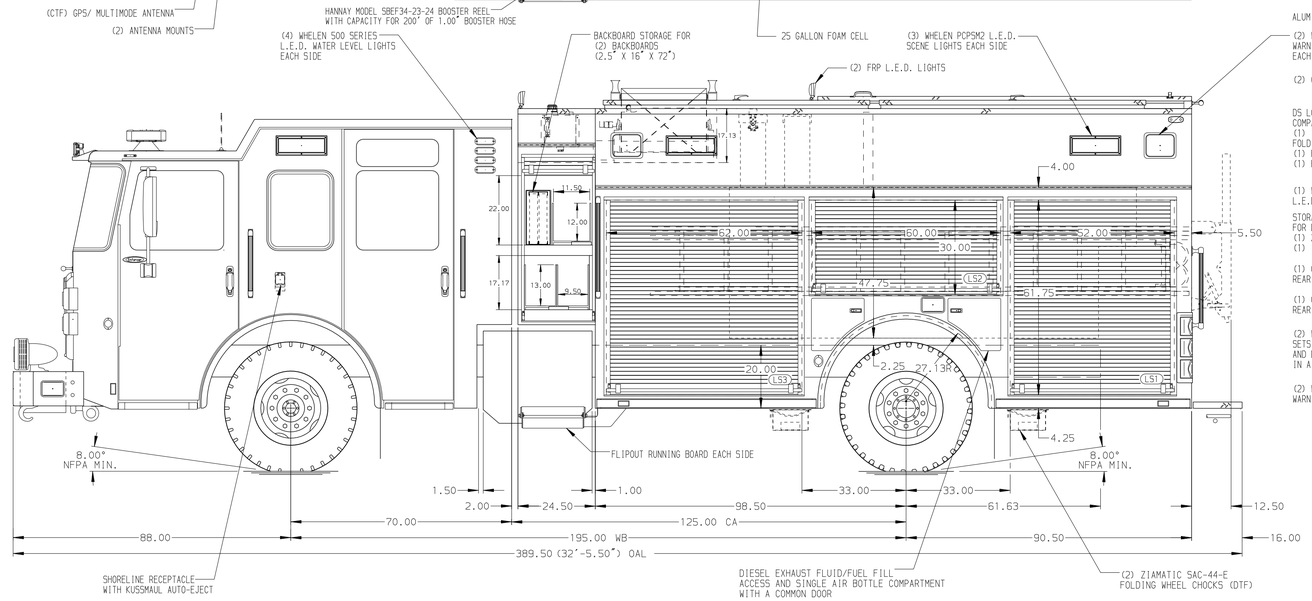

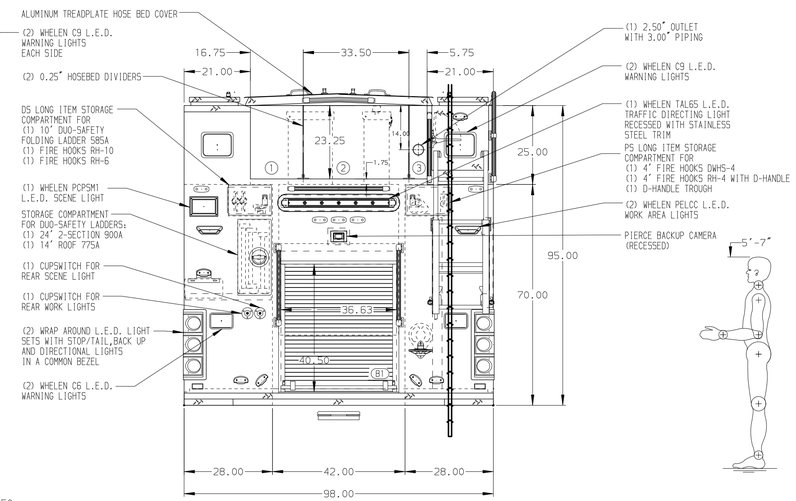

ALUMINUM BODY

NOTE

DIMENSIONS SHOWN ARE APPROXIMATE AND ARE SUBJECT TO MINOR DEVIATIONS AS MAY OCCUR OR BE NECESSARY IN CONSTRUCTION.
MINOR DETAILS NOT SHOWN.

1. BATTERY CHARGER LOCATED BEHIND DRIVERS SEAT
2. BATTERY CHARGER INDICATOR LOCATED NEAR D.S. SEAT RISER WITH BRACKET
3. AIR INLET/OUTLET W/ DISCONNECT FITTING LOCATED ON DS PUMP PANEL
4. TEN ADJUSTABLE FULL WIDTH/FULL DEPTH SHELVES: THREE IN RS3, TWO IN LS3 AND LS1, AND ONE IN B1, RS1, AND RS2
5. ONE TILTING SLIDE-OUT TRAY IN RS2
6. ONE FLOOR MOUNTED SLIDE-OUT TRAY IN LS1, B1, AND RS1
7. TWO SLIDE-OUT ALUMINUM PEGBOARD TOOLBOARDS IN RS3
8. ONE VERTICAL PARTITION LOCATED IN RS3
9. PULL STRAPS FOR EACH CROSSLAY ROLL UP DOOR
10. ONE ADJUSTABLE SLIDE-OUT TRAY IN LS1
11. ONE 120 NEMA DUPLEX RECEPTACLE IN LS1 AND RS1
12. ONSPOT AUTOMATIC TIRE CHAINS TO BE PROVIDED AT THE REAR
13. KEYED LOCK FOR ROLL UP DOOR IN LS3
14. PARTITION BETWEEN LS1/B1 AND RS1/B1
15. CABLE RELEASE ON TILT TRAY IN RS2
16. CABLE RELEASE ON TILT TRAY IN LS2

REV	DATE	BY	CH
V	03DEC21	LST	DTS

CHASSIS DATA
MAKE: PIERCE
MODEL: ENFORCER

Pierce MANUFACTURING INC.

TITLE: 1500-D-805P, 750 G OF WATER W/ 25 & 30 G FOAM CELLS 189" PUC RESCUE, LADDERS THRU BODY, (3) CROSSLAYS
FOR: PELHAM FIRE DEPARTMENT, PELHAM, ALABAMA
DWG NO.: 36631AD

JOB NO.	SCALE	DRAWN BY	CHECKED BY	SHEET SIZE	SHEET NO.
36631 01-02	1:24	LST	EGO	D	1 OF 1
	DATE	09SEP21	15SEP21		

View File Created 03-DEC-2021 13:29:24