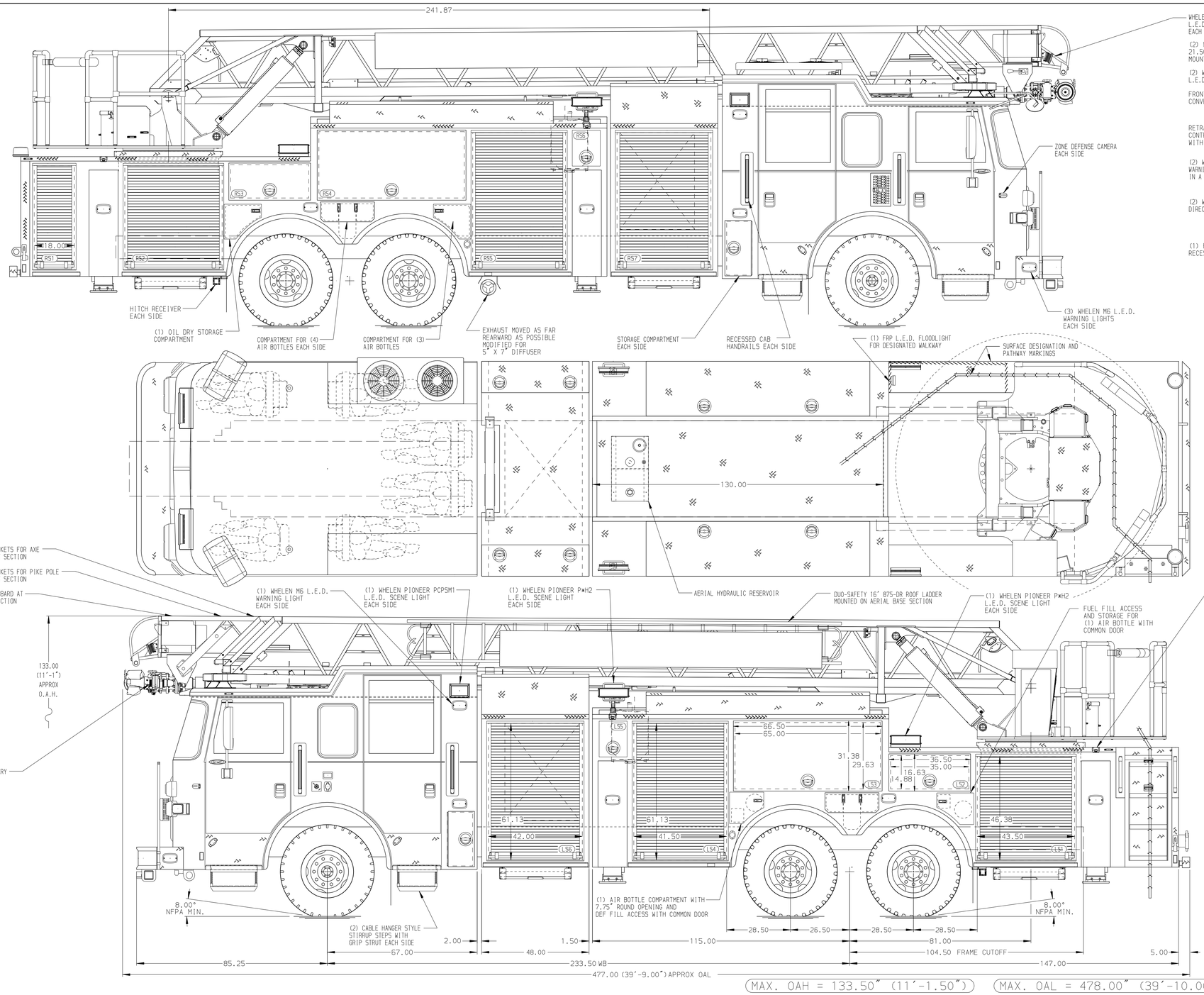

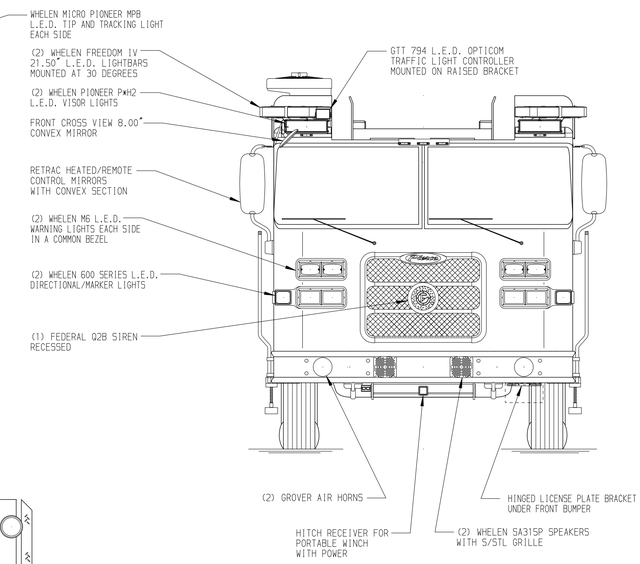

BODY
Aerial, HD Ladder 105', Alum Body
COMPT,LEFT SIDE FRONT
FH/FD RollUp and Lift-up Forward w/o Chute
COMPT,LEFT SIDE REAR
FH/FD RollUp and Lift-up Rearward
COMPT,RIGHT SIDE FRONT
FH/FD RollUp and Lift-up Forward w/o Chute
COMPT,RIGHT SIDE REAR
FH/FD RollUp and Lift-up Rearward

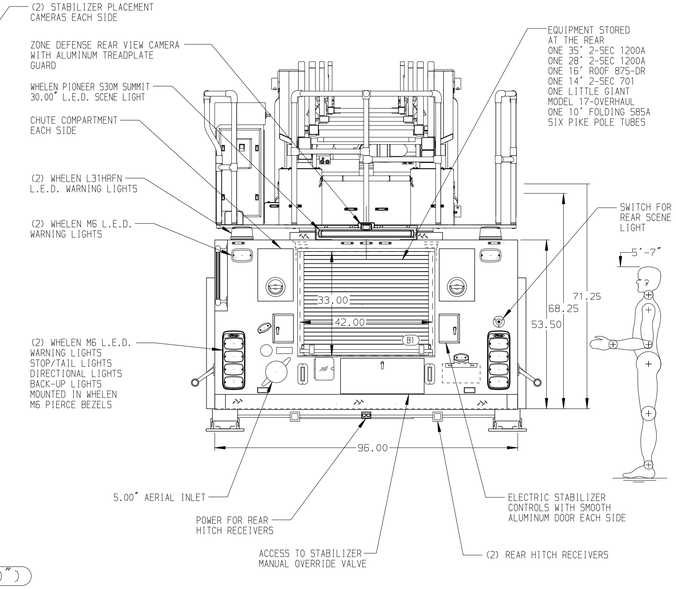

CHASSIS	CAB	AXLE,FRONT,CUSTOM	TRANSMISSION	PUMPHOUSE	CROSSLAYS,1.50"	SPEEDLAYS	SAFETY
Arrow XT Chassis	6710 Notched Arrow XT Cab	19,500 Lb Dana Axle	Allison 5th Gen, 4000 EVS P	48" COMPARTMENT IPO PUMP	1.50" Crosslays Not Required	Speedlays Not Required	Side Roll and Frontal Impact Protection
ENGINE	BUMPER	AXLE,REAR		PUMP	CROSSLAYS,2.50"	GENERATOR	
500 HP Cummins X12 Engine	16" Stainless Steel	48,000 Lb Meritor Axle		PUMP NOT REQURIED	2.50" Crosslay Not Required	Generator Not Required	

NOTE

DIMENSIONS SHOWN ARE APPROXIMATE AND ARE SUBJECT TO MINOR DEVIATIONS AS MAY OCCUR OR BE NECESSARY IN CONSTRUCTION.
MINOR DETAILS NOT SHOWN.

1. ONE 10000# WARN ZEON PORTABLE RECEIVER TYPE WINCH
2. SHORELINE RECEPTACLE WITH KUSSMAUL SUPER AUTO-EJECT LOCATED ON DRIVER SIDE OF THE CAB
3. AIR INLET WITH KUSSMAUL AIR EJECT LOCATED ON DRIVER SIDE OF THE CAB
4. BATTERY CHARGE INDICATOR LOCATED ON DRIVER SIDE OF THE CAB
5. ONE 120V DUPLEX RECEPTACLE LOCATED IN CAB PER SHOP ORDER
6. 13.00" SHORTENED AERIAL EGRESS
7. TURNTABLE WELDMENT LOWERED 2.00"
8. 1.00" LOWERED PEDESTAL
9. LIFTING EYE ROPE RESCUE ATTACHMENT AT AERIAL TIP
10. 6.00" LIMITED RETRACTION
11. JUNCTION BOX 6.29"LX4.72"WX5.51"H (P/N 1232374) IN L55 AND RS6 FOR FLOOD LIGHT CONTROLS

REV	DATE	BY	CH
7	17JAN22	SHU	CWI
6	19OCT21	TKA	CWI

CHASSIS DATA
MAKE: PIERCE
MODEL: ARROW-XT

Pierce MANUFACTURING INC.

TITLE: 105' AERIAL LADDER AND BODY ASSEMBLY
-
FOR: EVERETT FIRE DEPARTMENT
EVERETT, MA
DWG NO. 36711AD-SH1

JOB NO.	SCALE	DRAWN BY	CHECKED BY	SHEET SIZE	SHEET NO.
36711	1:24	TKA	NDA	D	1 OF 1

DATE: 11AUG21 / 12AUG21

View File Created 18-JAN-2022 08:43:20