PUMPER

BODY
Long Aluminum 2nd Gen Pumper

CHASSIS
Enforcer Chassis

CHASSIS

AXLE, FRONT, CUSTOM
18,000 Lb TAK-4 Axle

AXLE, REAR
24,000 Lb Dana Axle

ENGINE
450 HP Cummins L9 Engine

TRANSMISSION
Allison 5th Gen, 3000 EVS P

BUMPER
10" Extended Stainless Steel

CAB
6010 Enforcer Cab

BODY

WATER TANK
500 Gallon New York Style Water Tank

COMPT, PUMPER, REAR
30.75" FF Rollup Rear Compt

COMPT, PUMPER, LEFT SIDE
161" Lap Full Height & Depth Front & Rear

COMPT, PUMPER, RIGHT SIDE
161" Lap Full Height & Depth Front & Rear

FIRE SUPPRESSION

PUMPHOUSE
45" Control Zone Side Mount

PUMP
1500 GPM Waterous CSU

CROSSLAYS, 1.50"
(2) 1.50" Standard Capacity

CROSSLAYS, 2.50"
2.50" Crosslay Not Required

SPEEDLAYS
Speedlays Not Required

GENERATOR
Generator Not Required

Foam System
Foam System Not Required

Foam Cell
Foam Cell Not Required

Side Roll and Frontal Impact Protection

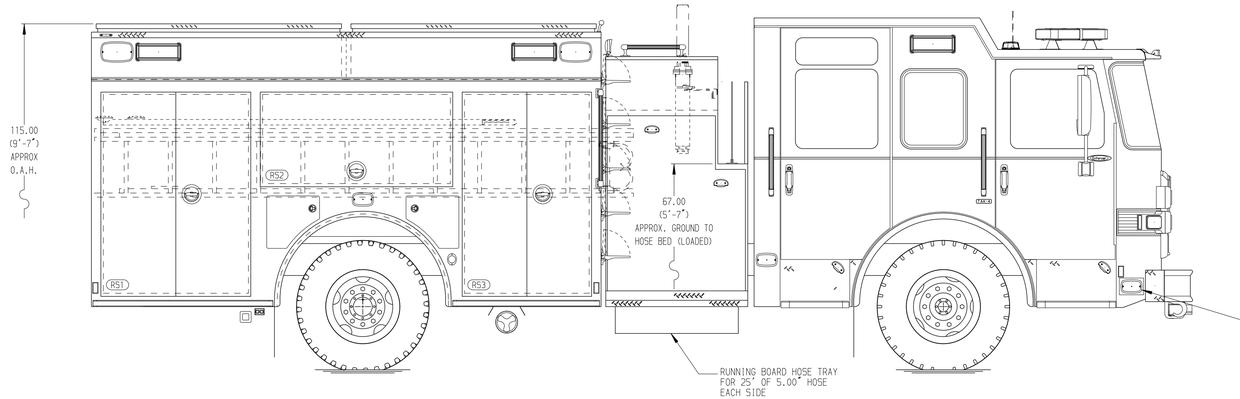

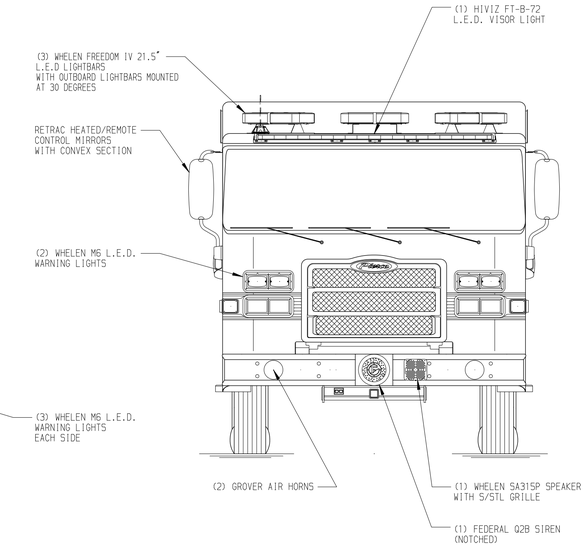

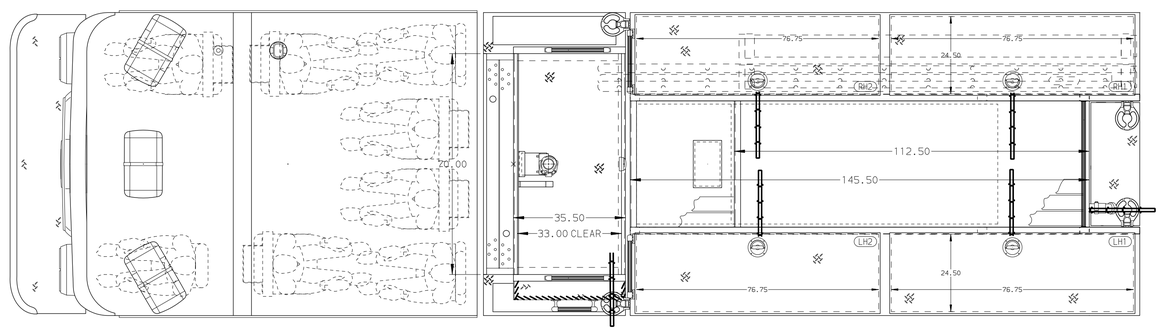

HOSEBED CAPACITY

BED 1
200' OF 2.50" D.J. POLY HOSE

BED 2
200' OF 3.00" D.J. POLY HOSE

BED 3
1200' OF 5.00" D.J. POLY HOSE

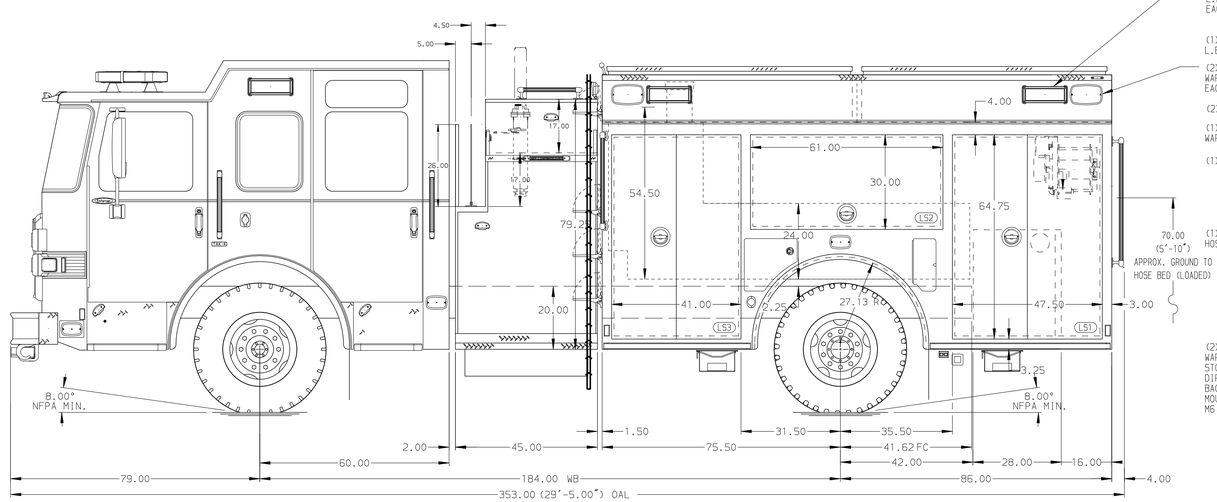

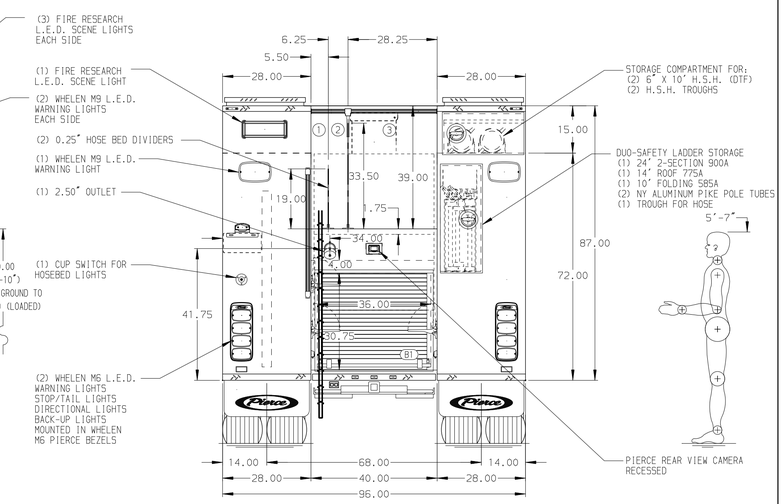

MAXIMUM O.A.H. 115.00"

NOTE

DIMENSIONS SHOWN ARE APPROXIMATE AND ARE SUBJECT TO MINOR DEVIATIONS AS MAY OCCUR OR BE NECESSARY IN CONSTRUCTION.
MINOR DETAILS NOT SHOWN.

1. SHORELINE RECEPTACLE WITH KUSSMAUL SUPER AUTO-EJECT LOCATED ON DRIVER SIDE OF THE CAB
2. AIR INLET WITH DISCONNECT COUPLING IN THE DRIVER SIDE STEPWELL
3. BATTERY CHARGER LOCATED BEHIND DRIVER SEAT
4. BATTERY CHARGE INDICATOR LOCATED ON THE DRIVER SIDE SEAT RISER
5. SIX ADJUSTABLE SHELVES IN COMPARTMENTS PER SHOP ORDER
6. TWO FLOOR MOUNTED SLIDE-OUT TRAY IN COMPARTMENT PER SHOP ORDER
7. ONE SLIDE-OUT TRAYS IN COMPARTMENT PER SHOP ORDER
8. TWO TILT/SLIDE-OUT TRAYS IN COMPARTMENT PER SHOP ORDER
9. ONE SLIDE-OUT TOOLBOARD IN COMPARTMENT PER SHOP ORDER
10. ONE VERTICAL PARTITION IN COMPARTMENT PER SHOP ORDER
11. MOUNTING PLATE IN COMPARTMENT PER SHOP ORDER
12. TWO HANNAY CABLE REELS (E1618-17-18) WITH 200' OF 10/3 CABLE LOCATED IN LS3 HIGH (PROVISIONS ONLY)

REV	DATE	BY	CH
2	29NOV21	MMF	COS
1	14SEP21	MMF	COL

CHASSIS DATA
MAKE: PIERCE
MODEL: ENFORCER

Pierce MANUFACTURING INC.

TITLE: Pierce Pumper Approval Drawing
FOR: Derry Volunteer Fire Company
DWG NO.: 36771AD

JOB NO.	36771
SCALE	1:24
DATE	
DRAWN BY	MMF
	13SEP21
CHECKED BY	COL
	13SEP21
SHEET SIZE	D
SHEET NO.	1 OF 1

View File Created 29-NOV-2021 14:01:15