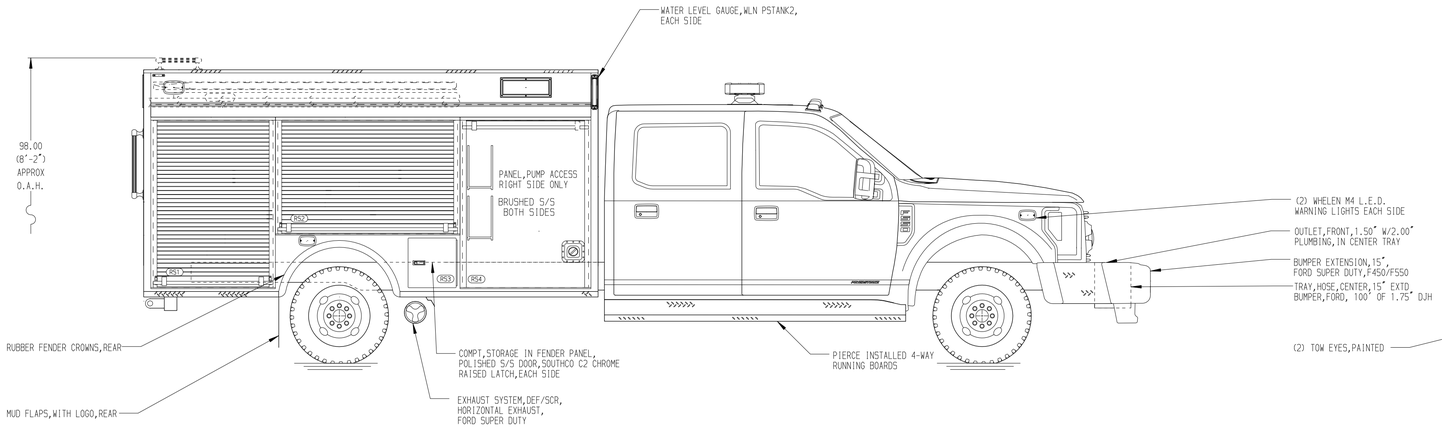

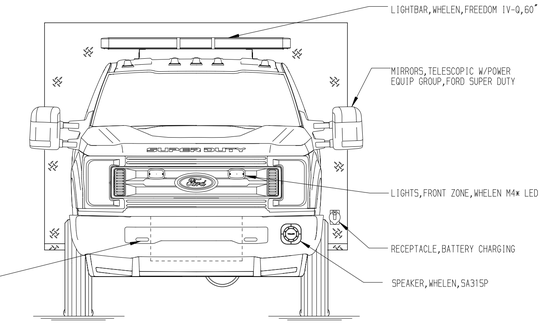

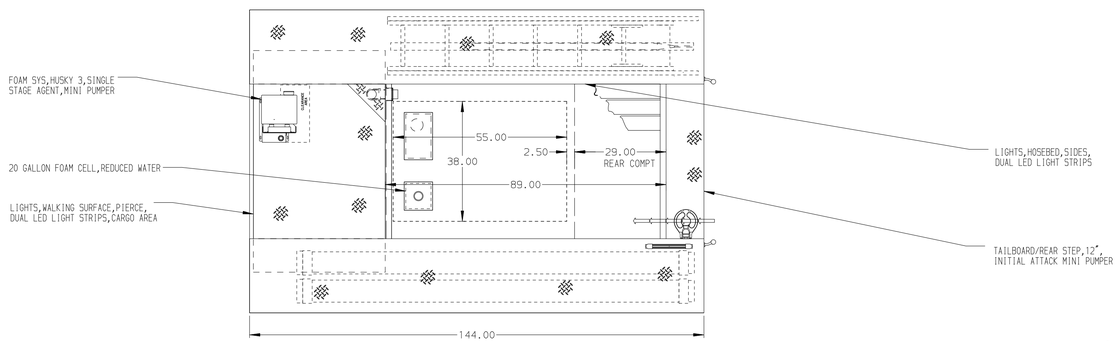

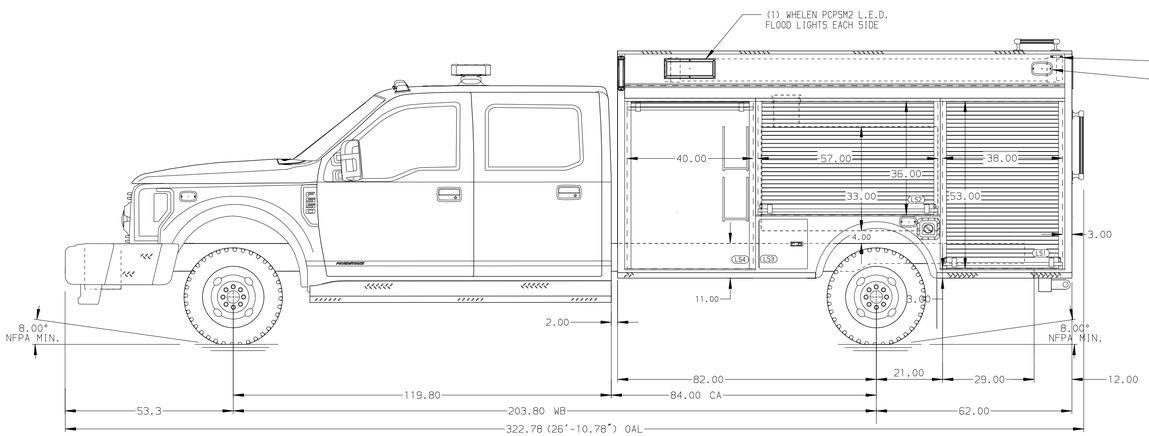

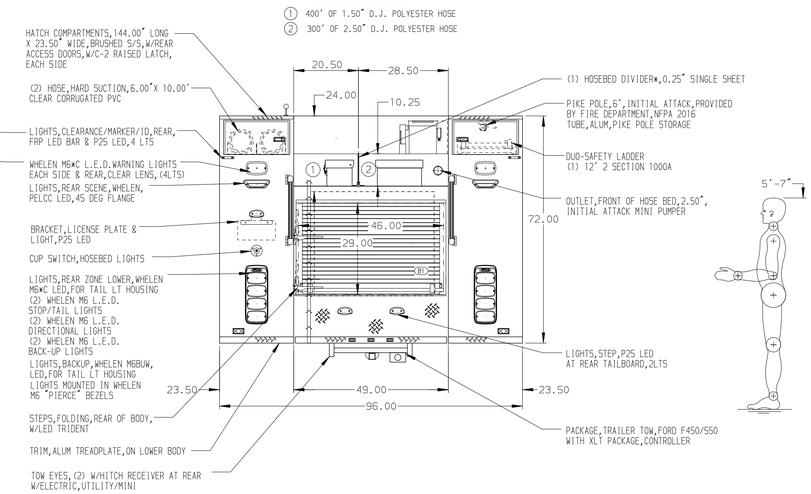

ALUMINUM BODY

NOTE

DIMENSIONS SHOWN ARE APPROXIMATE AND ARE SUBJECT TO MINOR DEVIATIONS AS MAY OCCUR OR BE NECESSARY IN CONSTRUCTION.
MINOR DETAILS NOT SHOWN.

REV.	DATE	BY	CHK'D
▽	-	-	-

CHASSIS DATA
CHASSIS FORD
MODEL F-550 4X4

Pierce MANUFACTURING INC.
BRADENTON, FLORIDA

JOB NO.	36793		
DATE	SCALE 1:24		
TITLE	1500-D-230 POLY,20 FOAM,84"CA,MINI PUMPER BODY (2) SPEEDLAYS	15OCT21	DRAWN BY JLA
FOR	PIERCE FIELD UNIT APPLETON WISCONSIN	18OCT21	CHK'D BY RHU
DRWG. NO.	36793AD	SHEET NO. 1 OF 1	SHEET SIZE D

View File Created 18-OCT-2021 08:09:09