PUMPER

BODY
Long Aluminum 2nd Gen Pumper

CHASSIS
Enforcer Chassis

CHASSIS

AXLE, FRONT, CUSTOM
18,000 lb Dana Axle

AXLE, REAR
27,000 lb Dana Axle

ENGINE
450 HP Cummins L9 Engine

TRANSMISSION
Allison 5th Gen, 3000 EVS P

BUMPER
19" Extended Stainless Steel

CAB
7010 Enforcer Cab

BODY

WATER TANK
1000 Gallon Poly Water Tank

COMPT, PUMPER, REAR
44.50" FF Rollup Rear Compt

COMPT, PUMPER, LEFT SIDE
161" Rollup Full Height Front & Rear FDLER

COMPT, PUMPER, RIGHT SIDE
161" Rollup Full Height Front & Rear FDLER

FIRE SUPPRESSION

PUMPHOUSE
45" Control Zone Top Mount

PUMP
1500 GPM Waterous CS

CROSSLAYS, 1.50"
1.50" Crosslays Not Required

CROSSLAYS, 2.50"
2.50" Crosslay Not Required

SPEEDLAYS
(2) 1.50" & (1) 2.50" W/Tray Std. Capacity

GENERATOR
Generator Not Required

Foam System
Husky 3 Single Agent Foam System

Foam Cell
25 Gallon Foam Cell, Not Reduced Water

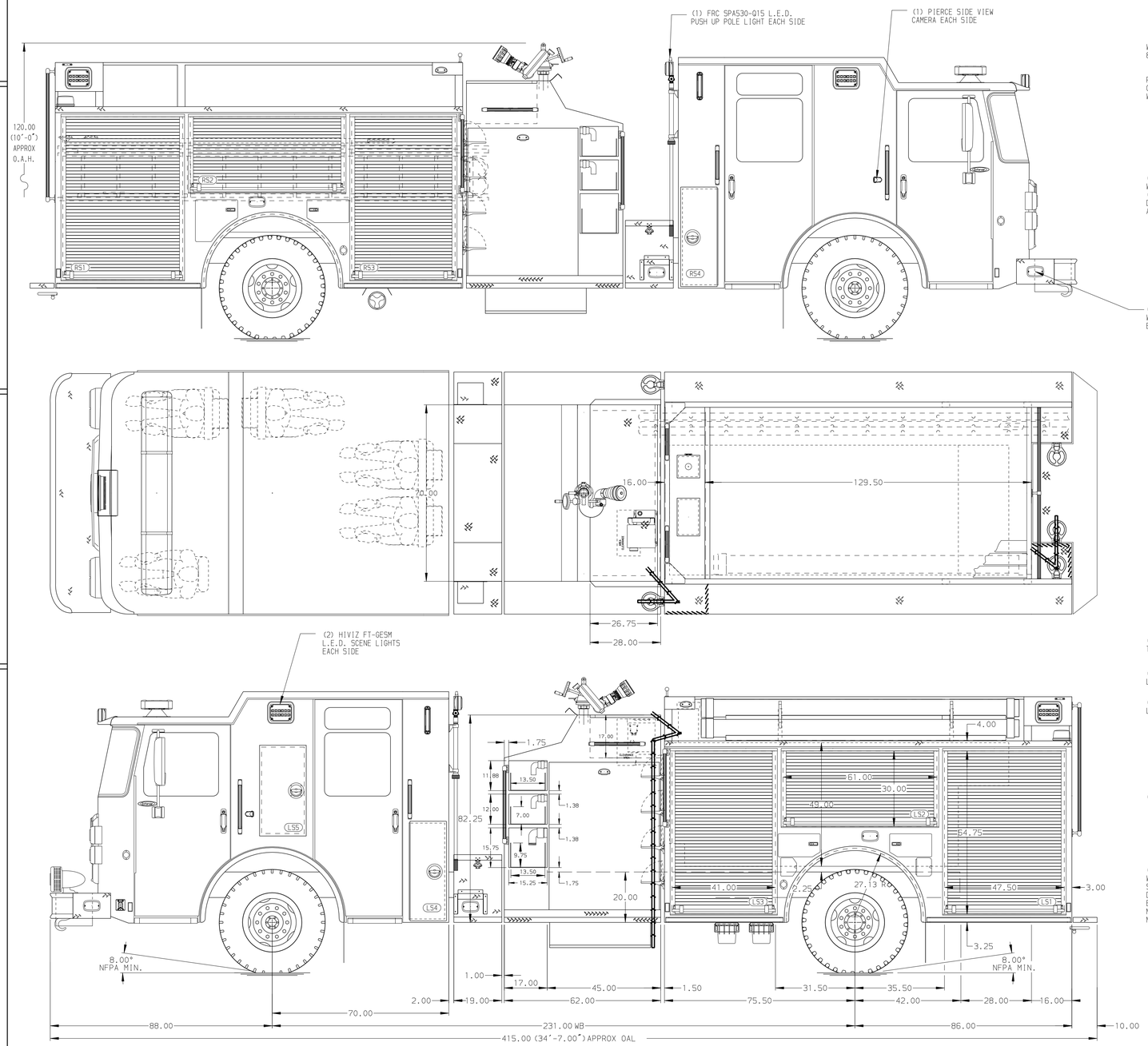

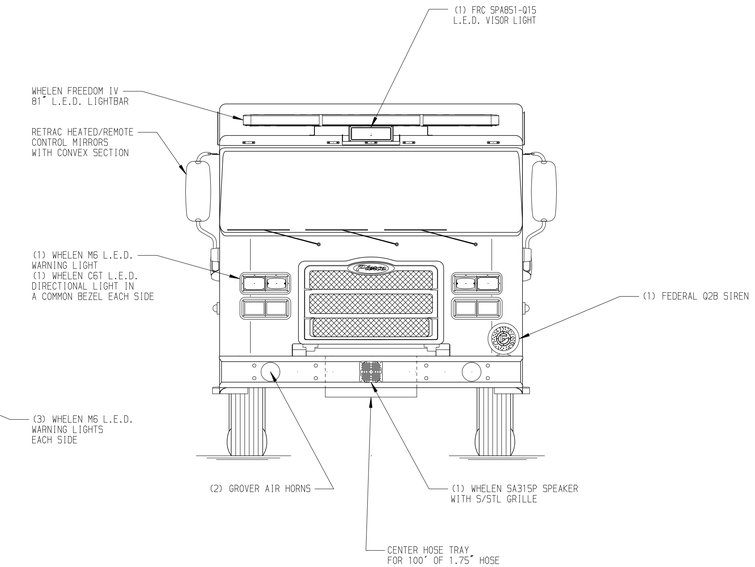

HOSEBED CAPACITY

BED 1
OPEN

BED 2
300' OF 1.75" D.J. POLY HOSE

BED 3
800' OF 5.00" D.J. POLY HOSE

BED 4
400' OF 2.50" D.J. POLY HOSE

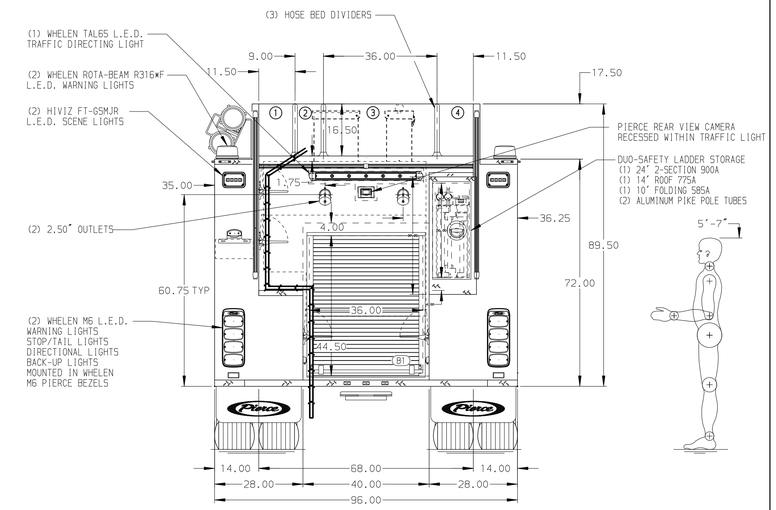

MAXIMUM O.A.H = 144.00"

NOTE

DIMENSIONS SHOWN ARE APPROXIMATE AND ARE SUBJECT TO MINOR DEVIATIONS AS MAY OCCUR OR BE NECESSARY IN CONSTRUCTION.
MINOR DETAILS NOT SHOWN.

1. ONE 1.50 OUTLET WITH 2.00 PIPING AND SWIVEL LOCATED IN CENTER BUMPER TRAY
2. BLUE SEA SURE EJECT SHORELINE LOCATED ON DRIVER SIDE OF THE CAB
3. BATTERY CHARGER LOCATED IN COMPARTMENT PER SHOP ORDER
4. BATTERY CHARGE INDICATOR LOCATED ON THE DRIVER SIDE SEAT RISER
5. SIX ADJUSTABLE SHELVES IN COMPARTMENTS PER SHOP ORDER
6. THREE FLOOR MOUNTED SLIDE-OUT TRAY IN COMPARTMENT PER SHOP ORDER
7. ONE TOOLBOARD IN COMPARTMENT PER SHOP ORDER
8. PEGBOARD ON BACK WALL IN COMPARTMENT PER SHOP ORDER
9. ONSPOT AUTOMATIC TIRE CHAINS
10. ONE "L" SHAPED PARTITION LOCATED PER SHOP ORDER

REV	DATE	BY	CH
B	09NOV21	MMF	DTJ
A	09SEP21	MMF	DTJ

CHASSIS DATA
MAKE: PIERCE
MODEL: ENFORCER

Pierce MANUFACTURING INC.

TITLE: Pierce Pumper Approval Drawing
FOR: Atkins Fire Department
DWG NO.: 36854AD

JOB NO.	36854
SCALE	1:24
DATE	
DRAWN BY	MMF
DATE	28JUL20
CHECKED BY	COL
DATE	12JUL21
SHEET SIZE	D
SHEET NO.	1 OF 1

View File Created 10-NOV-2021 09:25:50