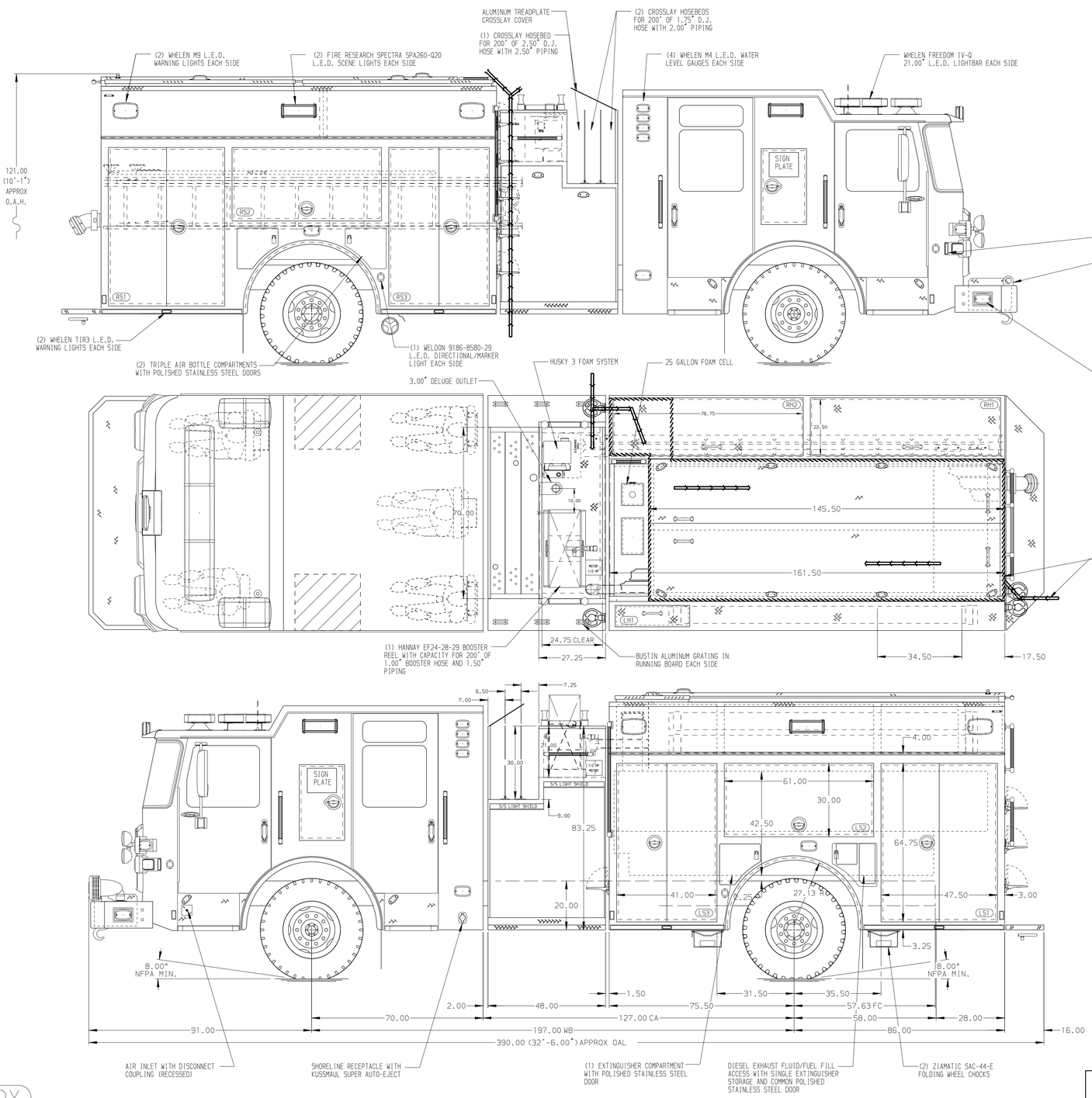

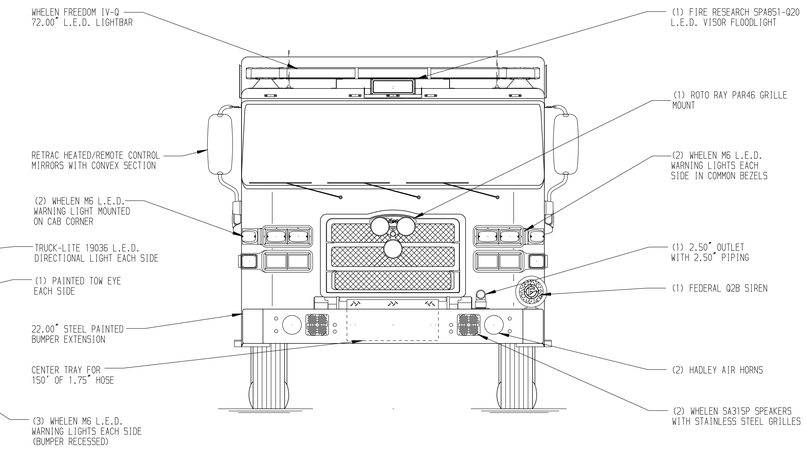

HOSEBED CAPACITIES

1 - 300' OF 2.50" D.J. POLY HOSE
2 - 800' OF 3.00" D.J. POLY HOSE
3 - 1000' OF 5.00" L.D. HOSE
4 - OPEN HOSE BED

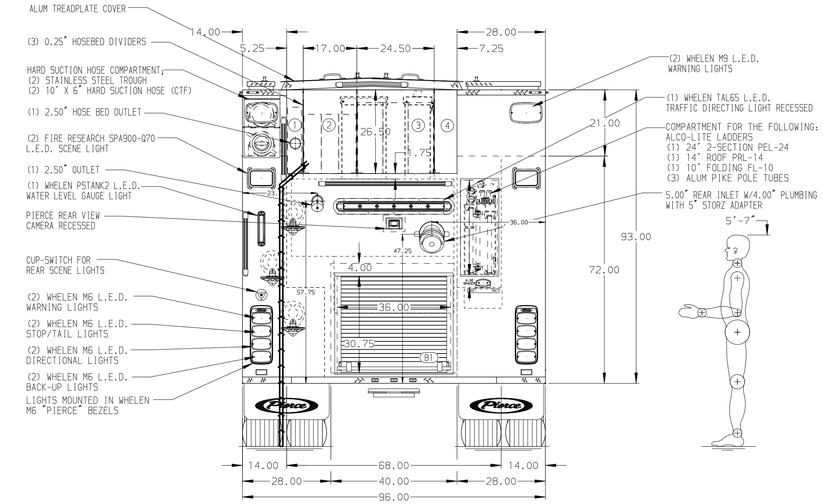

ALUMINUM BODY

NOTE

DIMENSIONS SHOWN ARE APPROXIMATE AND ARE SUBJECT TO MINOR DEVIATIONS AS MAY OCCUR OR BE NECESSARY IN CONSTRUCTION.
MINOR DETAILS NOT SHOWN.

1. VOGEL LUBE SYSTEM PUMP LOCATED PER SHOP ORDER
2. BATTERY CHARGER LOCATED BEHIND DRIVER'S SEAT
3. BATTERY CHARGER INDICATOR LOCATED ON DRIVER'S SEAT RISER

CUSTOMER APPROVAL

APPROVED BY:

DATE:

Pierce MANUFACTURING INC.

CHASSIS DATA	
MAKE	PIERCE
MODEL	ENFORCER
TITLE	1500-D-1000P,975G WATER,25G FOAM, 161" FDLER BODY (3) S.S CROSSLAY, RS BODY LADDER STORAGE, DELUGE
FOR	HORRY COUNTY FIRE AND RESCUE CONWAY, SOUTH CAROLINA
DWG NO.	36962AD-SH1
JOB NO.	36962 (01-05)
SCALE	1:24
DRAWN BY	KLE
DATE	11JAN22
CHECKED BY	SMA
DATE	17JAN22
SHEET SIZE	D
SHEET NO.	1 OF 2

REV	DATE	BY	CH
▽	-	-	-

View File Created 17-JAN-2022 10:30:23