RIGHT SIDE COMPARTMENTS CONTAIN THE FOLLOWING:

COMPARTMENT RS1 CONTAINS:
-
-
-
-
-
-
-

COMPARTMENT RS2 CONTAINS:
-
-
-

COMPARTMENT RS3 CONTAINS:
-
-
-
-
-
-
-

COMPARTMENT RS4 CONTAINS:
- (1) ELECTRIC CORD REEL WITH 200' OF 10/3 YELLOW CORD
-
-
-
-
-
-

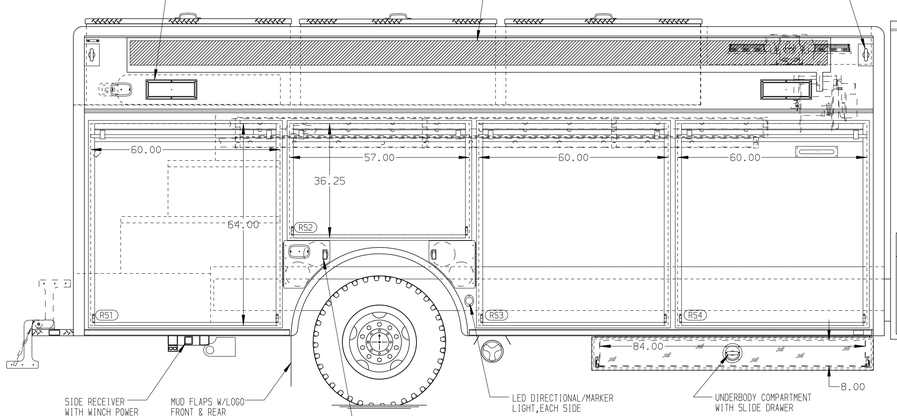

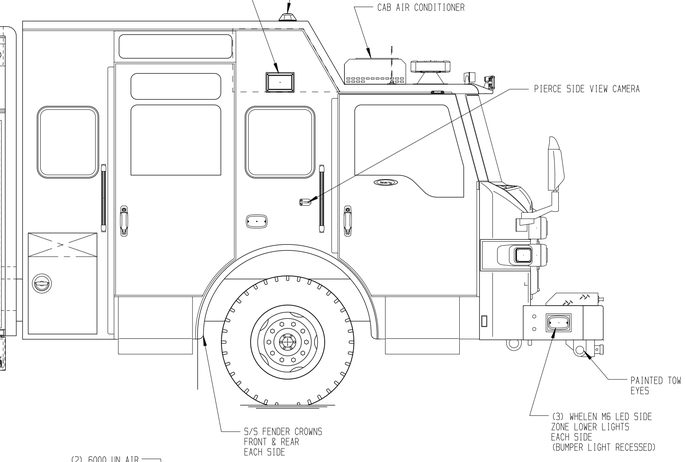

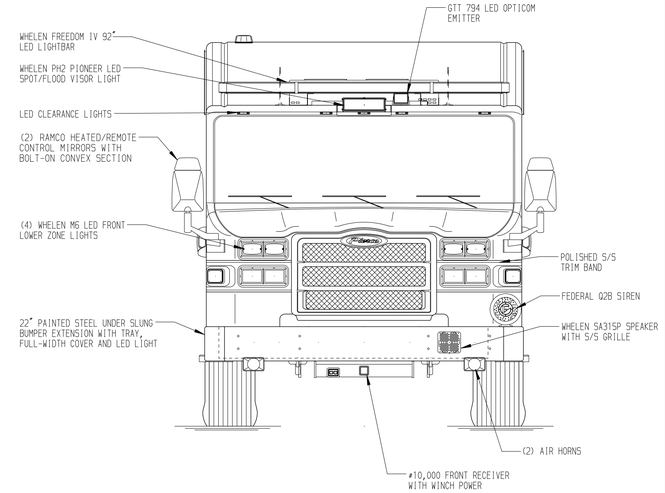

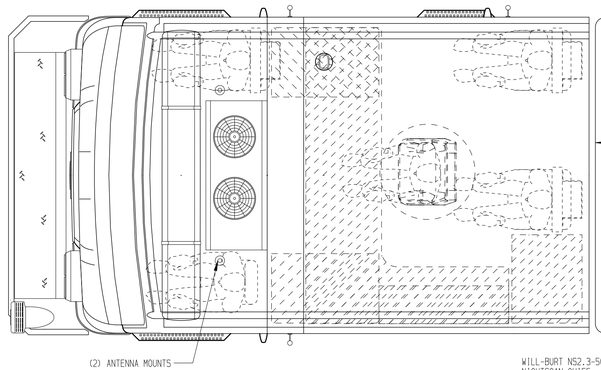

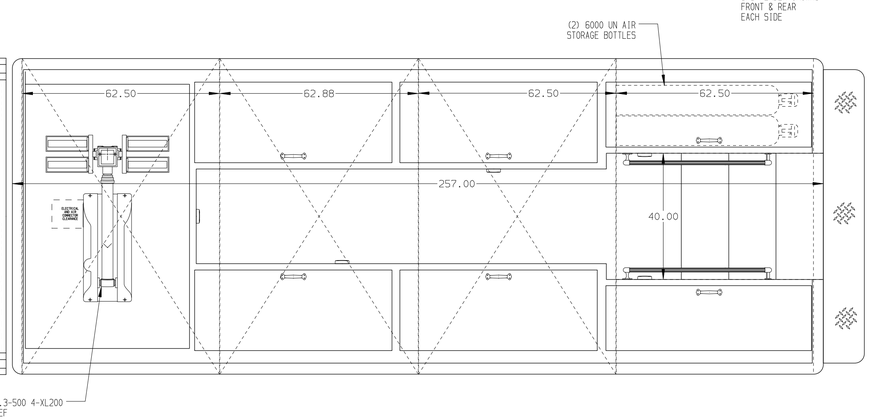

REAR COMPARTMENT CONTAINS THE FOLLOWING:

COMPARTMENT B1 CONTAINS:
- (1) RACK FOR THE FOLLOWING:
  - (1) 24'2-SECTION LADDER
  - (1) 14' ROOF LADDER
  - (3) PIKE POLES
-

COMPARTMENT B2 CONTAINS:
-
-
-

COMPARTMENT B3 CONTAINS:
-
-
-

COMPARTMENT B4 CONTAINS:
-
-
-
- (1) ELECTRIC CORD REEL WITH 200' OF 10/3 YELLOW CORD

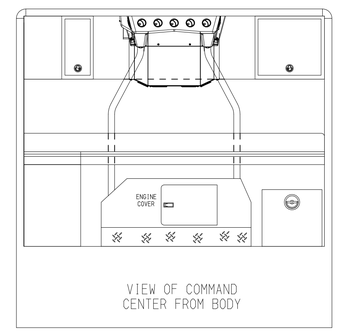

VIEW OF COMMAND CENTER FROM BODY

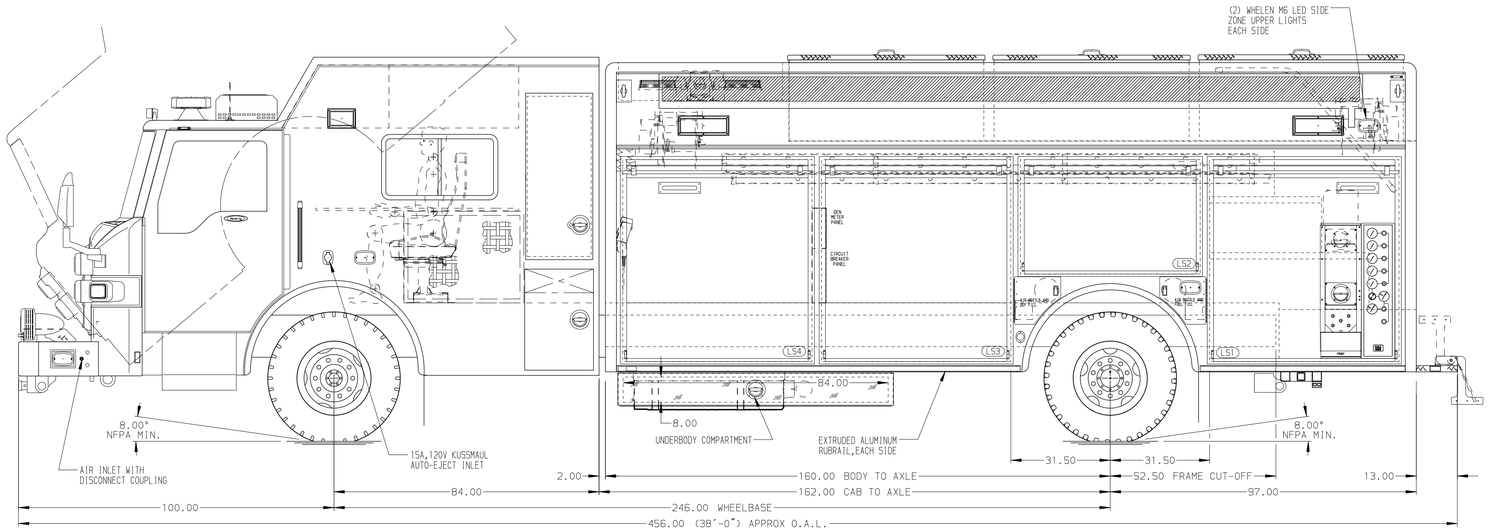

LEFT SIDE COMPARTMENTS CONTAIN THE FOLLOWING:

COMPARTMENT LS1 CONTAINS:
- (1) ELECTRIC CORD REEL WITH 200' OF 10/3 YELLOW CORD
-
-
-
-
-
-

COMPARTMENT LS2 CONTAINS:
-
-
-
-

COMPARTMENT LS3 CONTAINS:
- (1) CIRCUIT BREAKER PANEL
- (1) GENERATOR METER PANEL
-
-
-
-
-
-

COMPARTMENT LS4 CONTAINS:
- (1) KUSSMAUL 1200 CHARGER
- (1) NIGHT SCAN CONTROLLER
- (1) ELECTRIC CORD REEL WITH 200' OF 10/3 YELLOW CORD
- (1) CASCADE SYSTEM CONTROL PANEL
- (1) "SPACESAVER"2-BOTTLE FILL ENCLOSURE
-
-
-

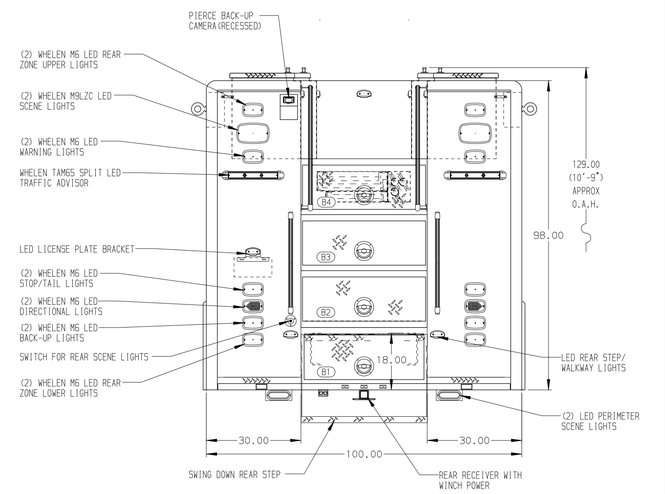

NOTE

DIMENSIONS SHOWN ARE APPROXIMATE AND ARE SUBJECT TO MINOR DEVIATIONS AS MAY OCCUR OR BE NECESSARY IN CONSTRUCTION.
MINOR DETAILS NOT SHOWN.

NOTES:
1. ONAN 15kW SINGLE PHASE PTO DRIVEN GENERATOR WITH SPLASH GUARD LOCATED BETWEEN THE FRAME RAILS
2. WARN #10,000 PORTABLE RECEIVER STYLE WINCH
3. POLISHED S/S SCUFFPLATES ON CAB AND CREW CAB DOOR JAMBS
4. BATTERY CHARGE INDICATOR LOCATED ON THE DRIVER'S SEAT WITH BRACKET
5. GUARDS ON ALL BODY ROLL-UP DOORS
6. PIERCE LED STRIP LIGHTS IN ALL BODY AND HATCH COMPARTMENTS

SIDE ROLL AND FRONTAL IMPACT PROTECTION

CLEAR DOOR WIDTH KEY

AMDOR ROLL UP DOORS:	-2 1/4"
GORTITE ROLL UP DOORS:	-2 1/2"
PIERCE DOUBLE LAP DOORS:	-4 1/4"
PIERCE LIFT-UP LAP DOORS:	-1 1/2"
(EX: 60"F-F - 2 1/4"= 57 3/4" CLEAR) (F-F)= FRAME TO FRAME	

REV	DATE	BY	CH

CHASSIS DATA
MAKE: PIERCE
MODEL: VXFR8420

CUSTOMER APPROVAL
APPROVED BY:
DATE:

Pierce MANUFACTURING INC.

TITLE: HEAVY DUTY RESCUE NON-WALKIN
FOR: NORTH COLLIER FIRE & RESCUE DISTRICT BID #760 ERIC HUOVINEN
DWG NO. 36990AD

JOB NO.	36990
SCALE	1:24
DATE	
DRAWN BY	DHE 26JAN22
CHECKED BY	AZU 28JAN22
SHEET SIZE	D
SHEET NO.	1 OF 1

View File Created 28-JAN-2022 08:04:10