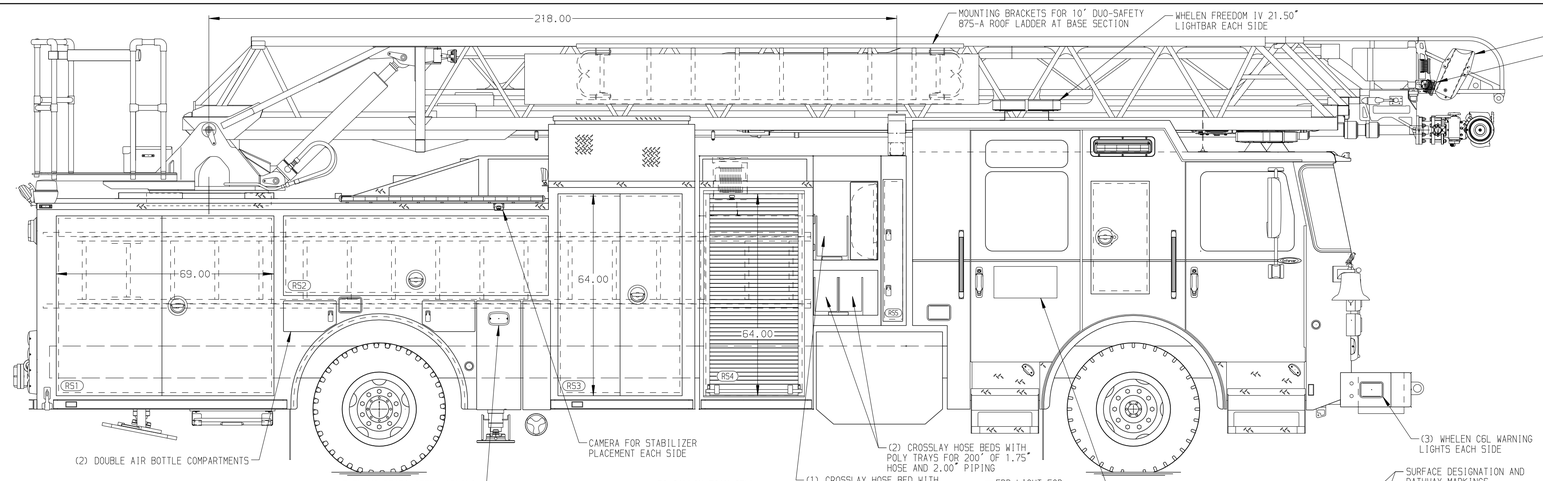

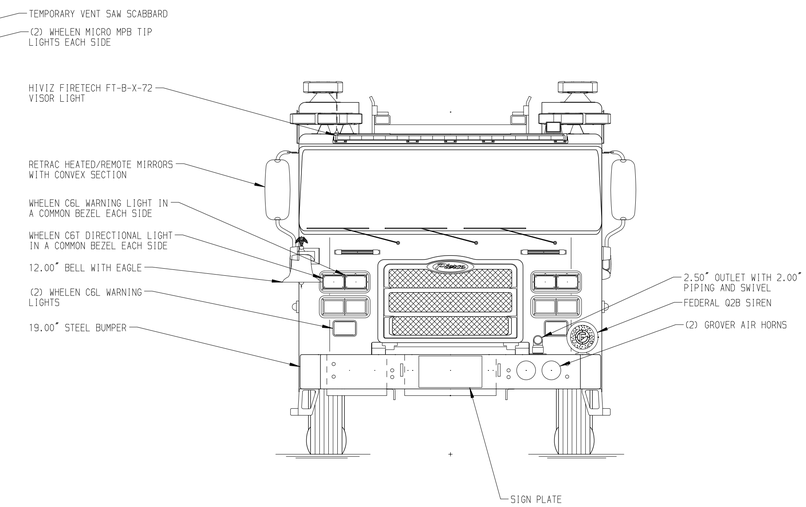

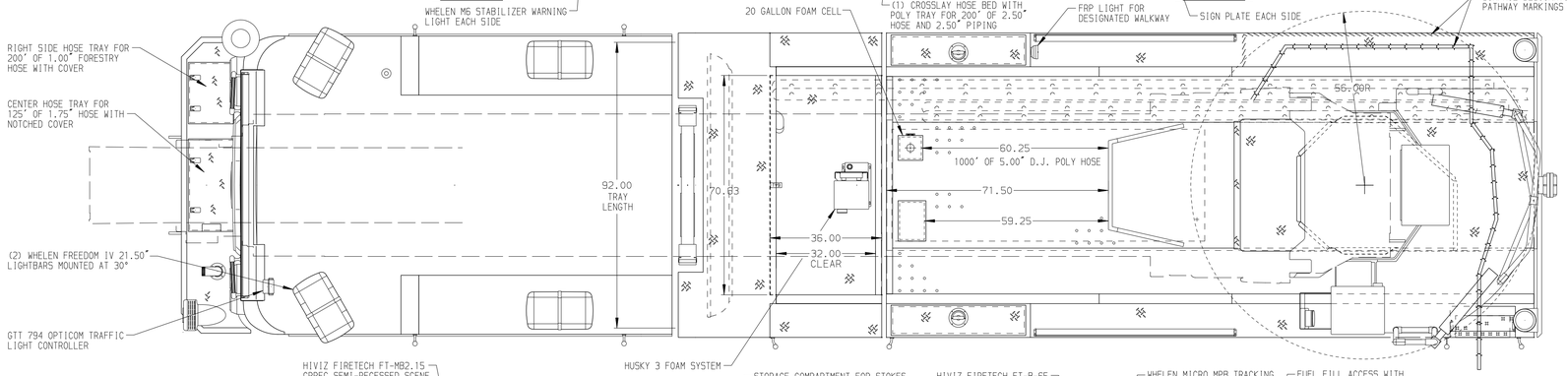

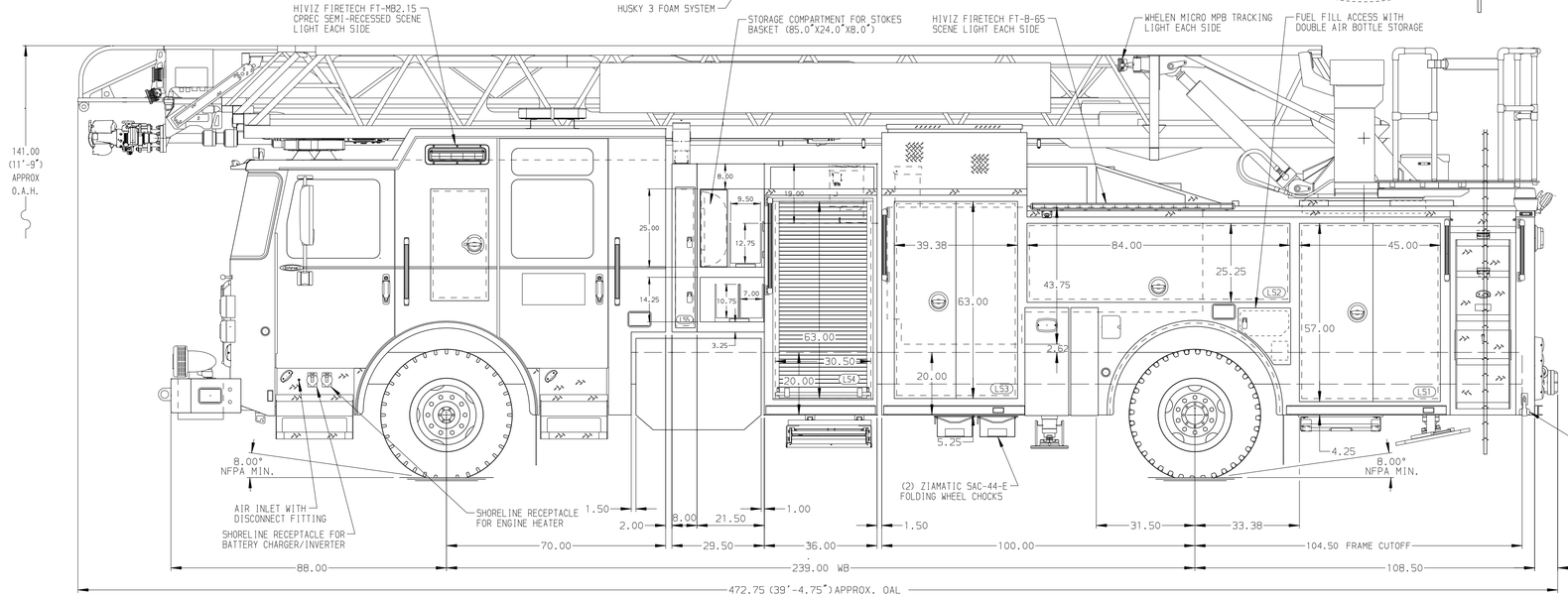

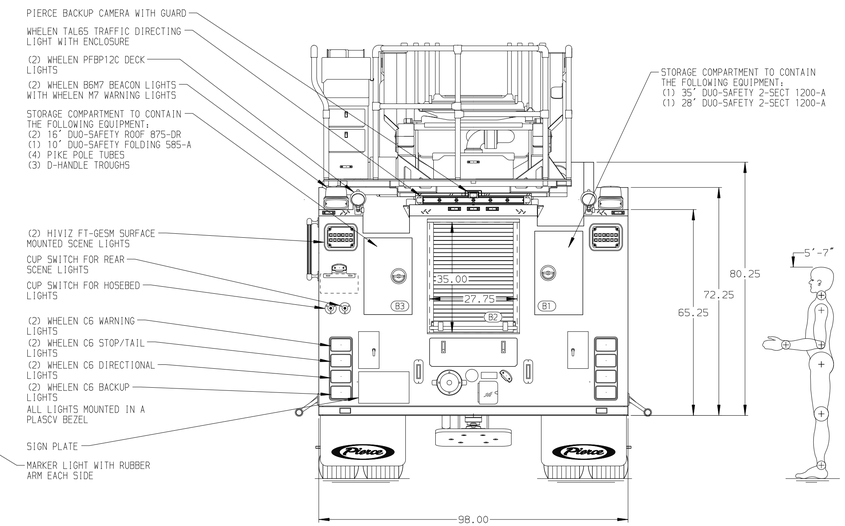

ALUMINUM BODY | SIDE ROLL AND FRONTAL IMPACT PROTECTION

NOTE

DIMENSIONS SHOWN ARE APPROXIMATE AND ARE SUBJECT TO MINOR DEVIATIONS AS MAY OCCUR OR BE NECESSARY IN CONSTRUCTION.
MINOR DETAILS NOT SHOWN.

1. ONSPOT AUTOMATIC TIRE CHAINS TO BE PROVIDED AT REAR
2. FOURTEEN FULL WIDTH/DEPTH ADJUSTABLE SHELVES WITH SIDES LOCATED PER ORDER
3. FOUR FLOOR MOUNTED SLIDE-OUT TRAYS WITH SIDES PER ORDER
4. ONE CTECH THREE DRAWER CABINET LOCATED PER ORDER
5. ONE SWING-OUT TOOLBOARD LOCATED PER ORDER
6. ONE VERTICAL PARTITION LOCATED PER ORDER
7. ONE MOUNTING PLATE LOCATED PER ORDER
8. THREE ADDITIONAL POLY TRAYS SHIPPED LOOSE
9. TWO 120V DUPLEX RECEPTACLES IN CAB PER ORDER
10. TWO 120V DUPLEX RECEPTACLES IN BODY COMPARTMENT LOCATED PER ORDER
11. MOUNTING BRACKETS AT THE AERIAL FLY SECTION FOR 12' NUPLA RUBBISH HOOK PIKE POLE
12. TECNIQ RUNG STYLE LIGHTING ON AERIAL LADDER SECTIONS PER ORDER
13. FIRE RESEARCH 2-WAY RADIO INTERCOM SYSTEM
14. LIMITED RETRACTION NOT REQUIRED

CUSTOMER APPROVAL

APPROVED BY: _____

DATE: _____

REV	DATE	BY	CH
▽	-	-	-

CHASSIS DATA

MAKE: PIERCE

MODEL: ENFORCER

DWG NO.: 37100AD

Pierce MANUFACTURING INC.

TITLE: 107' ASCENDANT AERIAL LADDER AND BODY ASSEMBLY
500 GALLON TANK-480 GAL WATER W/20 GAL FOAM CELL

FOR: KOOTENAI COUNTY FIRE AND RESCUE
POST FALLS, ID

JOB NO.	37100
SCALE	1:24
DATE	
DRAWN BY	BST 12FEB22
CHECKED BY	NDA 15FEB22
SHEET SIZE	D
SHEET NO.	1 OF 1

View File Created 15-FEB-2022 12:04:58