RIGHT SIDE COMPARTMENTS
CONTAIN THE FOLLOWING:

COMPARTMENT RS1 CONTAINS:
- (1) VERTICAL COMPARTMENT DIVIDER
- (1) STD DEPTH FIXED SHELF
- (1) 22"DP ADJ SLIDE OUT/TILT TRAY
- (1) NORCOLD REFRIGERATOR
- (1) 15/20A,120V DUPLEX RECEPTACLES
-
-
-

COMPARTMENT RS2 CONTAINS:
- (1) BAUER K18.1-20-E3 BREATHING AIR COMPRESSOR
- BREATHING AIR PURIFIERS
-
-

COMPARTMENT RS3 CONTAINS:
- (1) HORIZONTAL FLOOR EXTENSION
- (1) 42"DP ADJ SLIDE OUT TOOLBOARD
- (1) 2-WAY ADJ SLIDE OUT TOOLBOARD
-
-
-

COMPARTMENT RS4 CONTAINS:
- (1) HORIZONTAL FLOOR EXTENSION
- (1) 2-WAY ADJUSTABLE SHELF
- (1) 42"DP ADJ SLIDE OUT/TILT TRAY
-
-
-

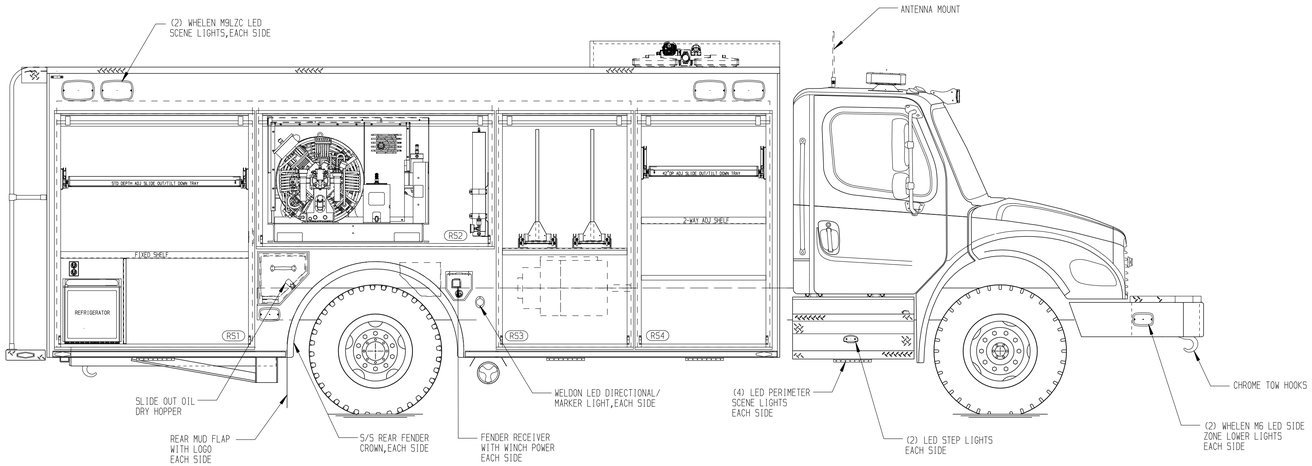

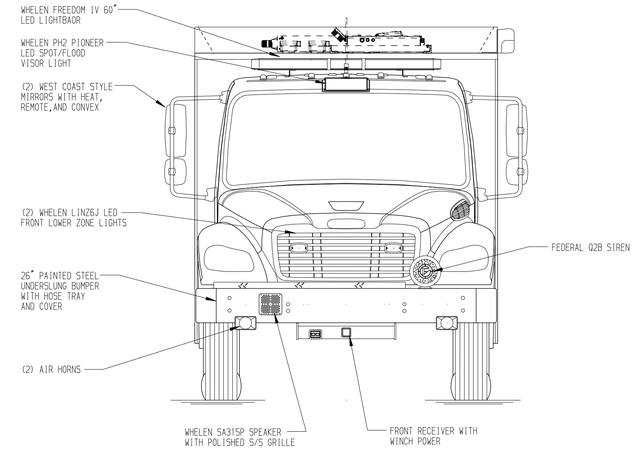

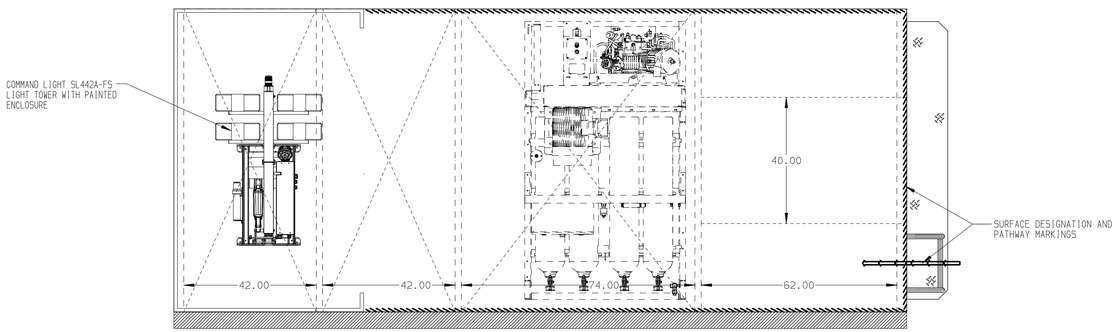

REAR COMPARTMENT CONTAINS
THE FOLLOWING:

COMPARTMENT B1 CONTAINS:
- (1) 58"DP ADJ SLIDE OUT TRAY
- (1) 52"DP ADJ SLIDE OUT/TILT TRAY
- (1) 58"DP FLOOR MOUNTED TRAY
-
-
-
-
-

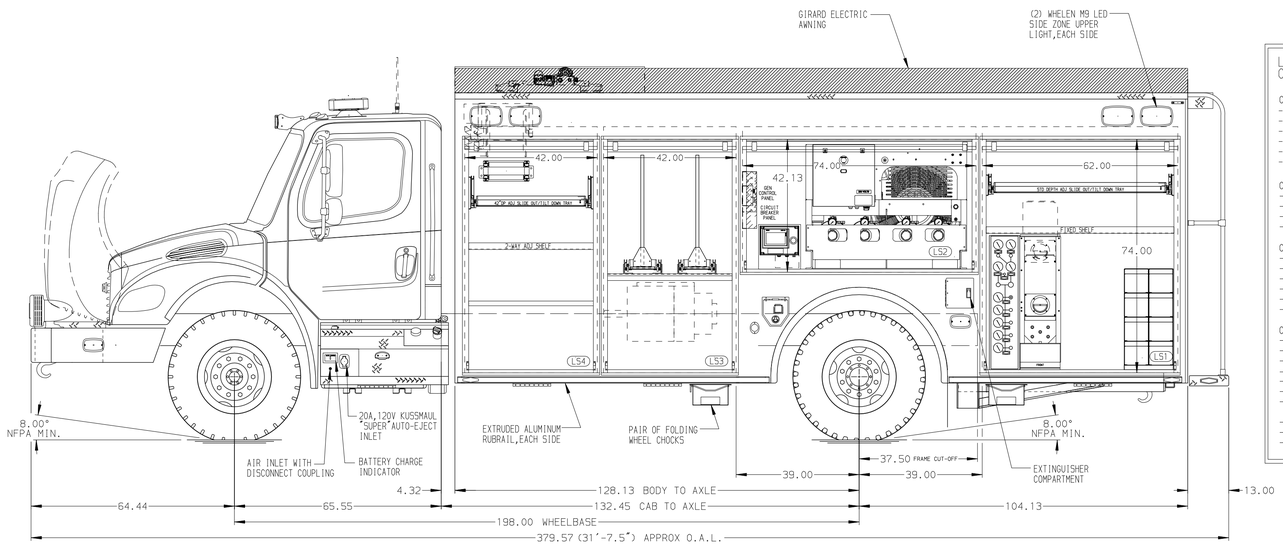

LEFT SIDE COMPARTMENTS
CONTAIN THE FOLLOWING:

COMPARTMENT LS1 CONTAINS:
- (1) RACK FOR 8 SCBA BOTTLES
- (1) 22"DP ADJ SLIDE OUT/TILT TRAY
- (1) STD DEPTH FIXED SHELF
- (1) CASCADE SYSTEM CONTROL PANEL
- (1) "SPACESAVER"2-BOTTLE FILL ENCLOSURE
-

COMPARTMENT LS2 CONTAINS:
- (1) CIRCUIT BREAKER PANEL
- (1) GENERATOR METER PANEL
- (1) BAUER K18.1-20-E3 BREATHING AIR COMPRESSOR
- (1) COMPRESSOR CONTROL PANEL

COMPARTMENT LS3 CONTAINS:
- (1) HORIZONTAL FLOOR EXTENSION
- (1) 42"DP ADJ SLIDE OUT TOOLBOARD
- (1) 2-WAY ADJ SLIDE OUT TOOLBOARD
-
-
-

COMPARTMENT LS4 CONTAINS:
- (1) KU55MAUL PUMP PLUS 1200 CHARGER
- (1) HORIZONTAL FLOOR EXTENSION
- (1) 2-WAY ADJUSTABLE SHELF
- (1) STD DEPTH FIXED SHELF
- (1) 42"DP ADJ SLIDE OUT/TILT TRAY
- (1) COMMAND LIGHT CONTROLLER
- (1) ELECTRIC CORD REEL WITH 200' OF 10/3 YELLOW CORD
-
-
-

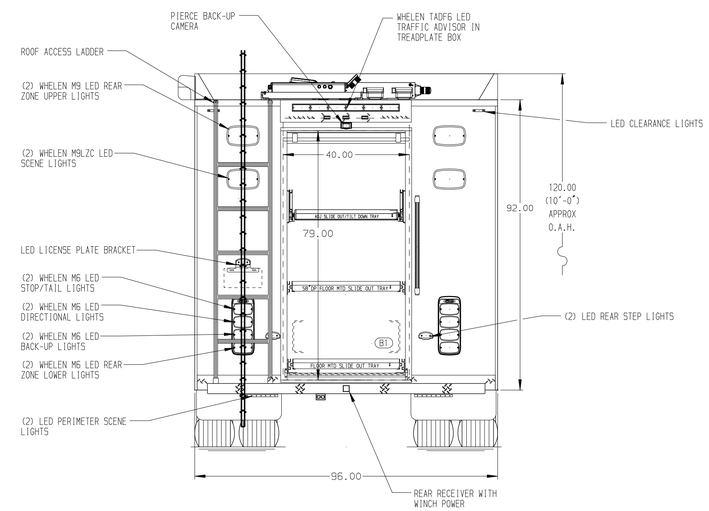

NOTE
DIMENSIONS SHOWN ARE APPROXIMATE AND ARE SUBJECT TO MINOR DEVIATIONS AS MAY OCCUR OR BE NECESSARY IN CONSTRUCTION.
MINOR DETAILS NOT SHOWN.

NOTES:
1. PIERCE LED STRIP LIGHTS IN ALL BODY COMPARTMENTS
2. LIMA 40kW THREE PHASE PTO DRIVEN GENERATOR LOCATED BETWEEN THE FRAME RAILS

MAXIMUM O.A.L. 33'-0"

CLEAR DOOR WIDTH KEY	
AMDOR ROLL UP DOORS:	-1 7/8"
GORTITE ROLL UP DOORS:	-2 3/4"
PIERCE DOUBLE LAP DOORS:	-4 1/4"
PIERCE LIFT-UP LAP DOORS:	-1 1/2"
(EX: 60"F-F - 1 7/8"= 58 1/8" CLEAR) (F-F)= FRAME TO FRAME	

REV	DATE	BY	CH
-	-	-	-

CHASSIS DATA
MAKE: FREIGHTLINER
MODEL: M2-106

Pierce MANUFACTURING INC.

TITLE: ENCORE RESCUE VEHICLE 42.42.74.62
FOR: SOUTHSIDE FIRE DEPARTMENT BID #547
JARED PHILLIPS
DWG NO.: 37141AD

JOB NO.	37141
SCALE	1:24
DATE	
DRAWN BY	DHE 19JAN22
CHECKED BY	CDK 25JAN22
SHEET SIZE	D
SHEET NO.	1 OF 1

View File Created 25-JAN-2022 11:11:46