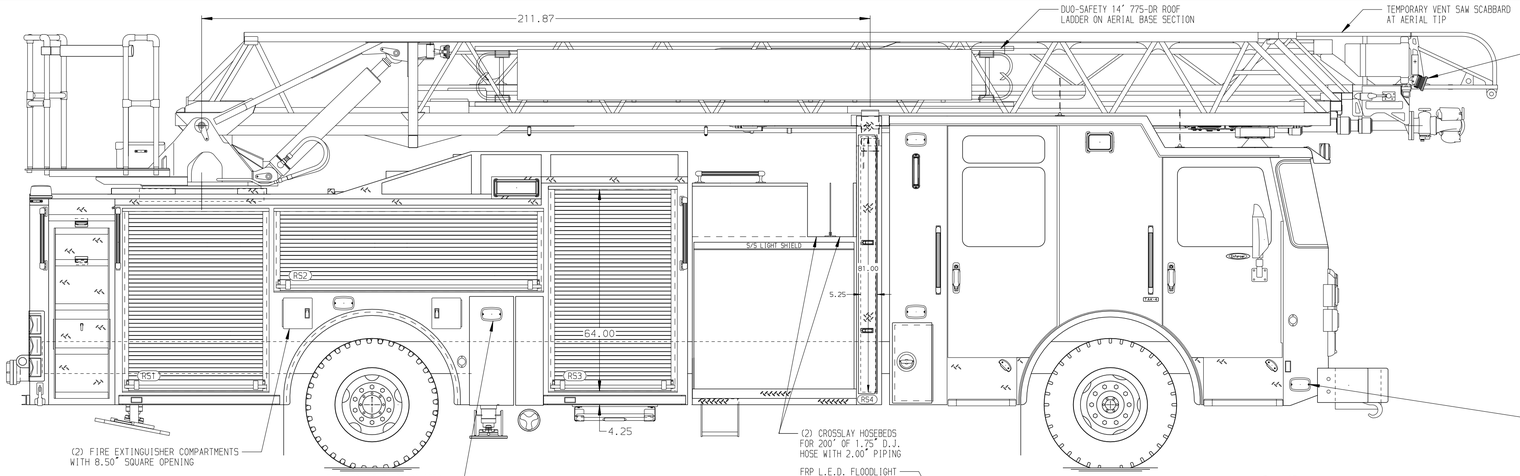

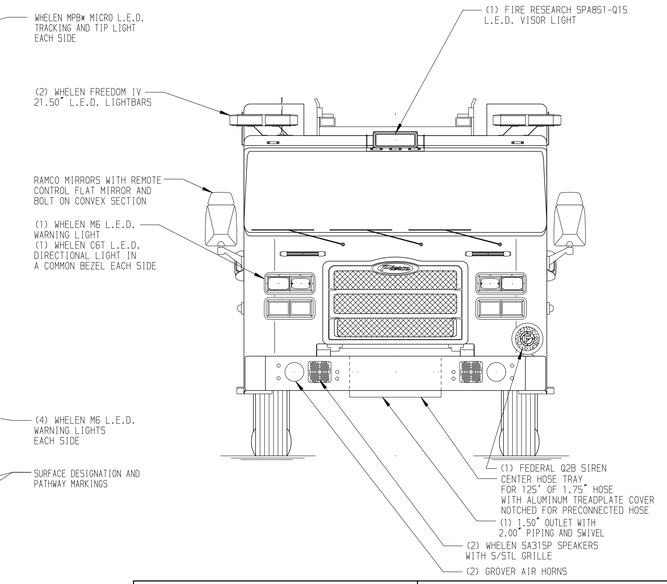

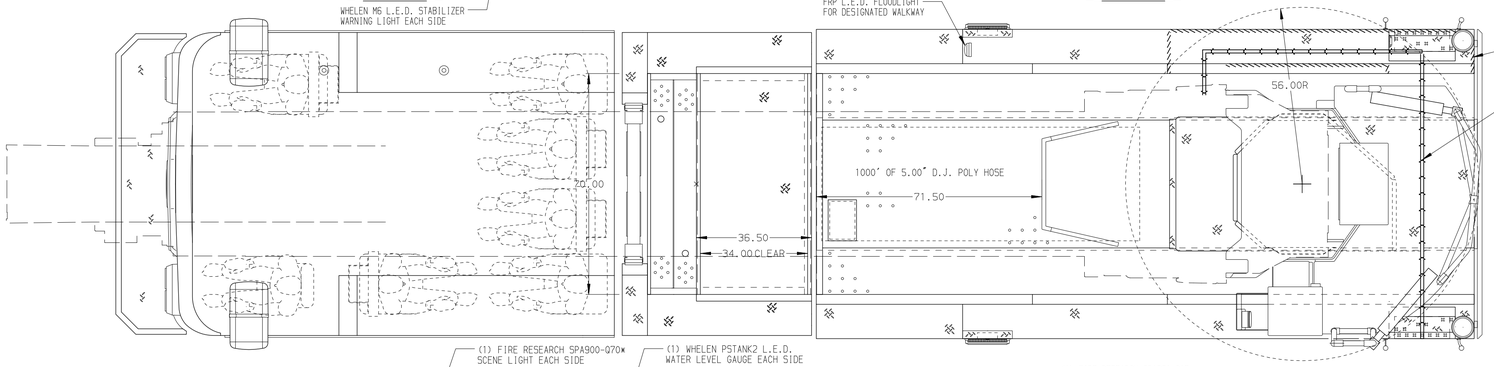

BODY	WATER TANK
107' ASL Aluminum Body	500 Gallon Poly Water Tank
COMPT,LEFT SIDE FRONT	Foam System
Full Height Rollup Forward	Foam System Not Required
COMPT,LEFT SIDE REAR	Foam Cell
Full Height Rollup Rearward	Foam Cell Not Required
COMPT,RIGHT SIDE FRONT	
Full Height Rollup Forward	
COMPT,RIGHT SIDE REAR	
Full Height Rollup Rearward	

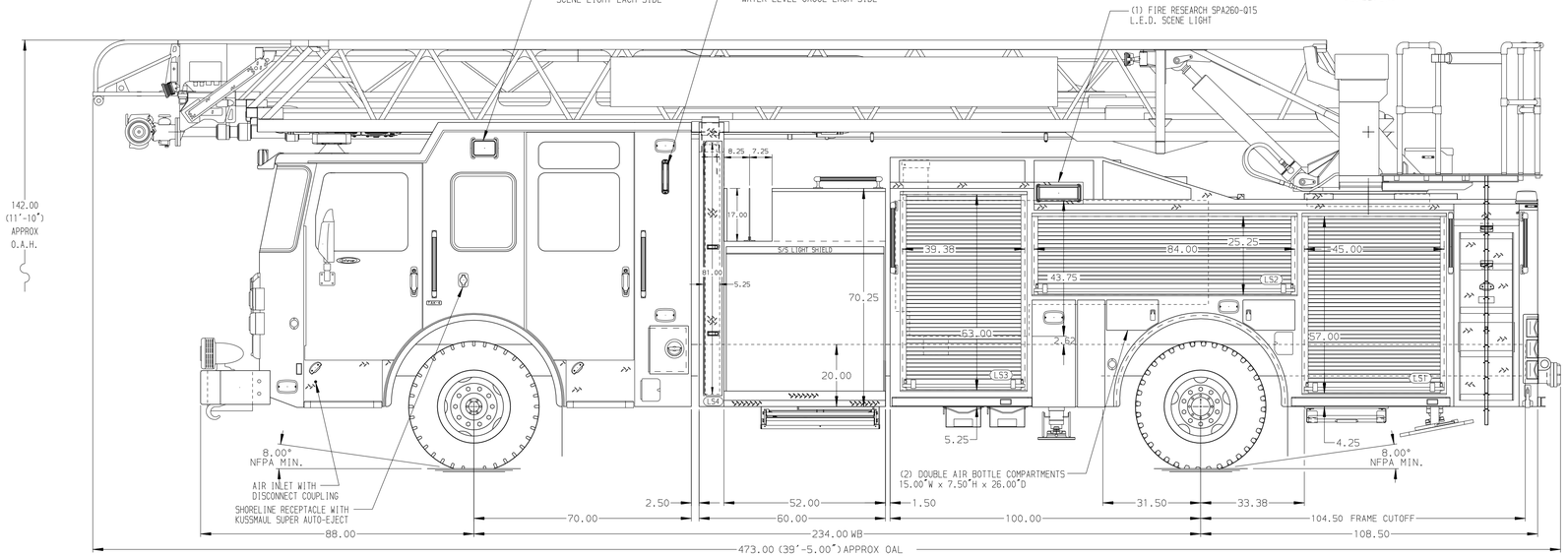

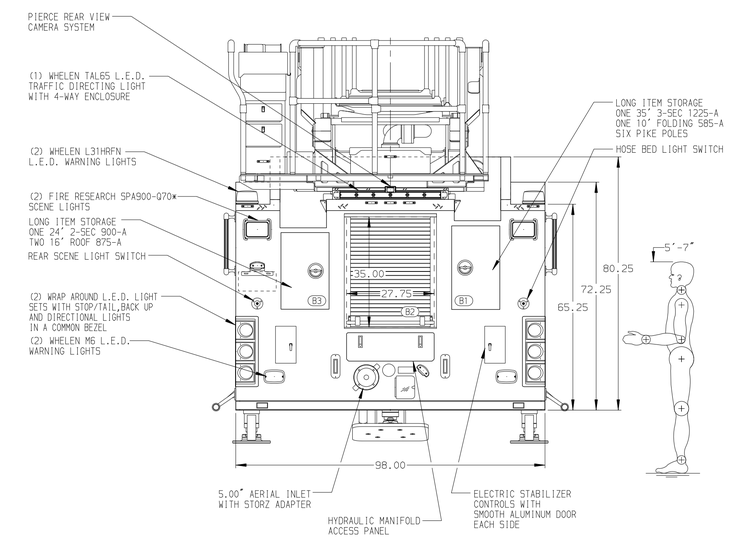

CHASSIS	CAB	AXLE,FRONT,CUSTOM	TRANSMISSION	PUMPHOUSE	CROSSLAYS,1.50"	SPEEDLAYS	-
Enforcer Chassis	7010 Notched Enforcer Cab	22,800 Lb Dana Axle	ALLison 5th Gen, 4000 EVS P	52" Control Zone Side Mount	(2) 1.50" Standard Capacity	Speedlays Not Required	-
ENGINE	BUMPER	AXLE,REAR		PUMP	CROSSLAYS,2.50"	GENERATOR	-
510 HP Paccar MX13 Engine	19" Extended Painted Steel	33,500 Lb Meritor Axle		1500 GPM Waterous CSU	2.50" Crosslay Not Required	Generator Not Required	

CUSTOMER APPROVAL

APPROVED BY: _____

DATE: _____

Pierce MANUFACTURING INC.

NOTE

DIMENSIONS SHOWN ARE APPROXIMATE AND ARE SUBJECT TO MINOR DEVIATIONS AS MAY OCCUR OR BE NECESSARY IN CONSTRUCTION.
MINOR DETAILS NOT SHOWN.

1. PACCAR DEF TANK MOUNTED UNDER CAB ON THE DRIVER'S SIDE
2. BATTERY CHARGER LOCATED BEHIND DRIVER'S SEAT
3. BATTERY CHARGER INDICATOR LOCATED ON DRIVER'S SEAT RISER
4. L.E.D. LIGHT STRIPS WITH STAINLESS STEEL PROTECTIVE COVER LOCATED IN HOSE BED
5. PULL STRAP ON DOOR IN COMPARTMENT PER ORDER
6. TWELVE ADJUSTABLE FULL WIDTH/FULL DEPTH SHELVES IN COMPARTMENT PER ORDER
7. ONE ADJUSTABLE TILTING SLIDE-OUT TRAY IN COMPARTMENT PER ORDER
8. FIVE FLOOR MOUNTED SLIDE-OUT TRAYS IN COMPARTMENT PER ORDER
9. ONE CTECH CABINET LOCATED IN COMPARTMENT PER ORDER
10. ONE SWING-OUT ALUMINUM TOOL BOARD IN COMPARTMENT PER ORDER
11. ALUMINUM PEGBOARD ON BACK WALL OF COMPARTMENT PER ORDER
12. TRIDENT FOLDING STEPS ON AERIAL DEVICE
13. L.E.D. LIGHTING ON AERIAL LADDER SECTIONS
14. 2-WAY INTERCOM SYSTEM BETWEEN AERIAL TIP OR PLATFORM AND TURNTABLE
15. WIRELESS CAMERA LOCATED AT AERIAL EGRESS
16. LIFTING EYE ROPE RESCUE ATTACHMENT AT AERIAL TIP
17. 1500 GPM HIGH FLOW WATERWAY
18. TWO 120V DUPLEX RECEPTACLES LOCATED IN CAB PER ORDER
19. FOUR 120V DUPLEX RECEPTACLES LOCATED IN CAB PER ORDER
20. AERIAL LIMITED RETRACTION NOT REQUIRED

REV	DATE	BY	CH
▽	-	-	-

CHASSIS DATA	
MAKE	PIERCE
MODEL	ENFORCER
TITLE	107' ASCENDANT AERIAL LADDER AND BODY ASSEMBLY -
FOR	SULPHUR FIRE DEPARTMENT -
DWG NO.	37142AD

JOB NO.	37142
SCALE	1:24
DATE	
DRAWN BY	JGA
	13JAN22
CHECKED BY	ZCH
	14JAN22
SHEET SIZE	D
SHEET NO.	1 OF 1

View File Created 14-JAN-2022 12:18:51