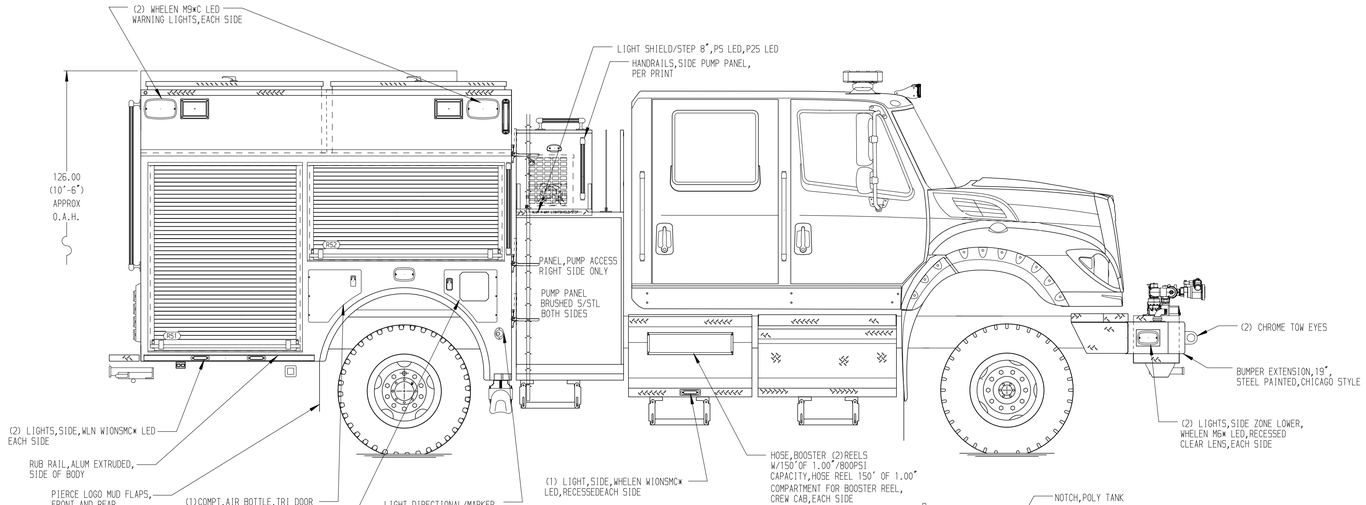

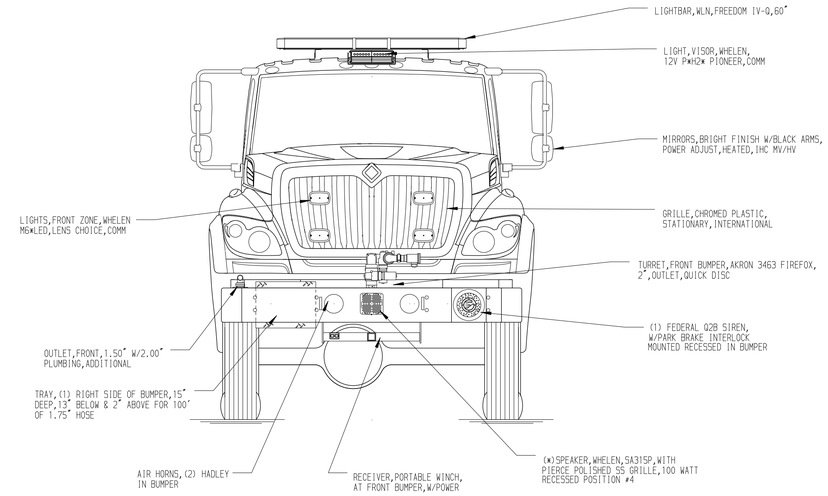

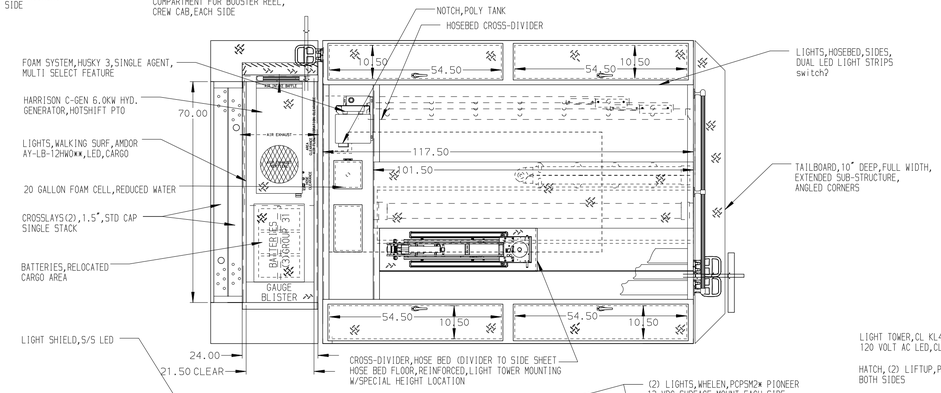

HOSEBED CAPACITIES

1. 400' OF 2.50" D.J. POLYESTER HOSE
2. 200' OF 2.50" D.J. POLYESTER HOSE
3. LADDER STORAGE
4. 800' OF 2.50" D.J. POLYESTER HOSE

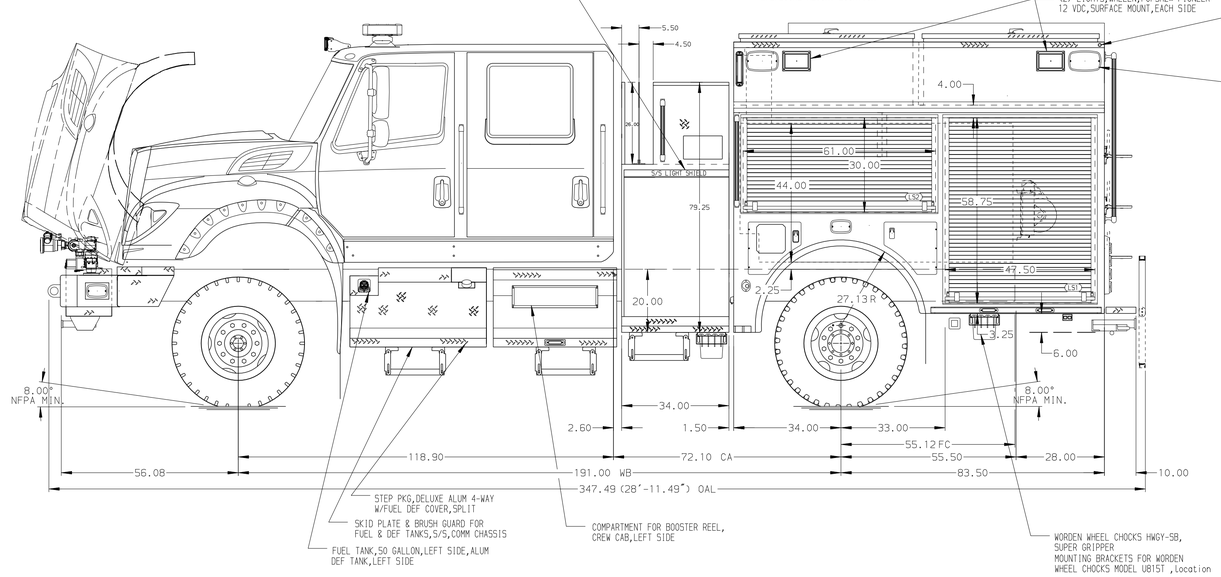

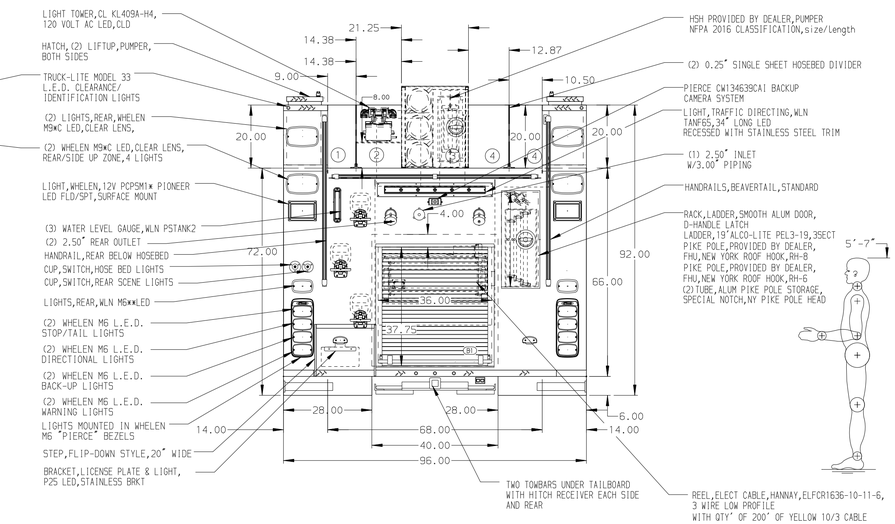

ALUMINUM BODY

NOTE

DIMENSIONS SHOWN ARE APPROXIMATE AND ARE SUBJECT TO MINOR DEVIATIONS AS MAY OCCUR OR BE NECESSARY IN CONSTRUCTION.
MINOR DETAILS NOT SHOWN.

REV	DATE	BY	CH
V	19SEP22	JLA	JAP
V	19AUG22	JLA	JAP
V	27MAY22	RHU	RWI
V	26MAY22	RHU	RWI

CHASSIS DATA — MAKE: IHC — MODEL: HV507 4X4

Pierce MANUFACTURING INC.
BRADENTON, FLORIDA

TITLE: 1000-D-480 WTR 20 FOAM,118"BODY LS&RS FULL HGT&DPTH 34"SIDE CNTRL,(2)1.5"CROSSLAYS SNGL STACK

FOR: ELLISTON FIRE DEPT, ELLISTON,VA

DWG NO.: 37156AD

JOB NO.	PRELIM
SCALE 1:24	DATE
DRAWN BY RHU	05MAY22
CHECKED BY RWI	12MAY22
SHEET SIZE D	SHEET NO. 1 OF 1

View File Created 23-SEP-2022 09:03:30