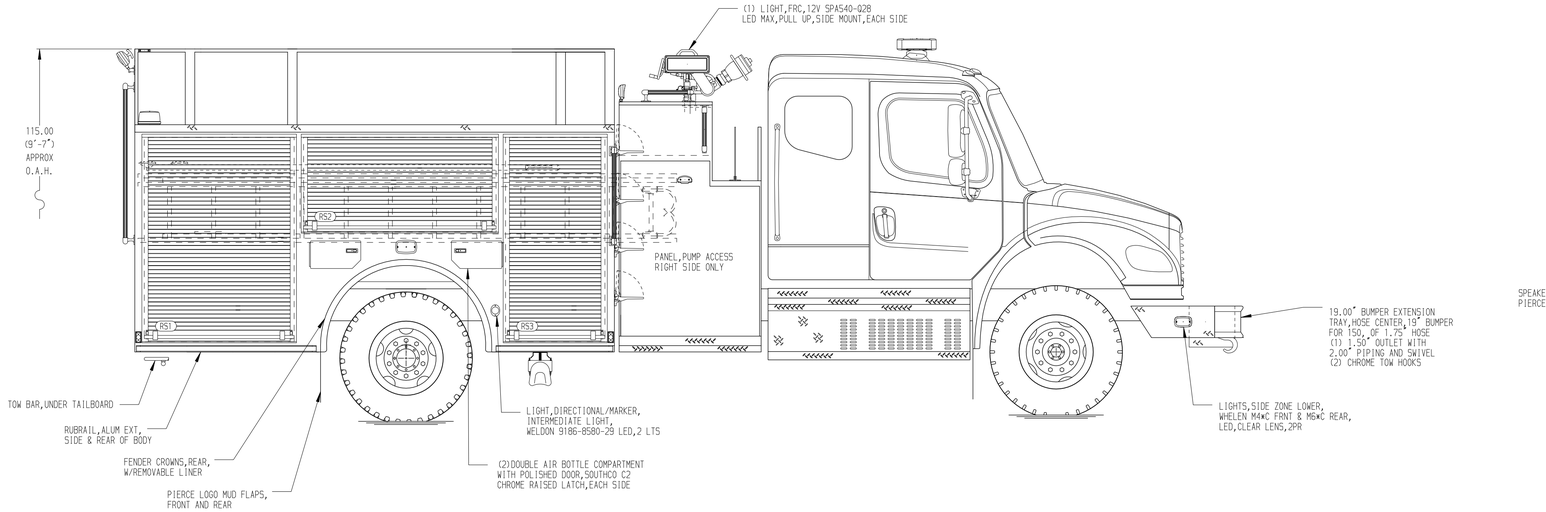

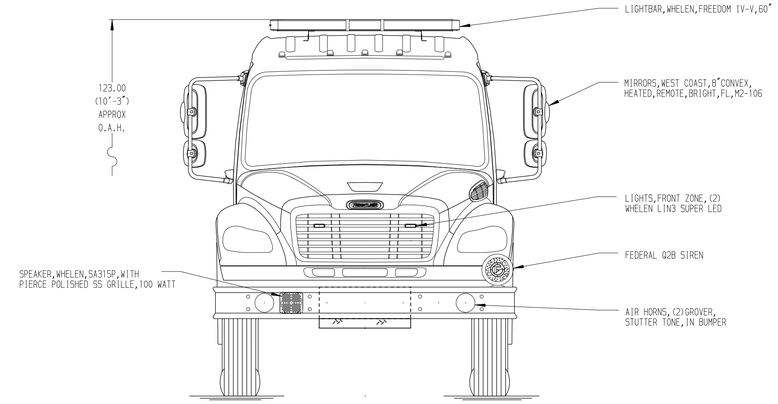

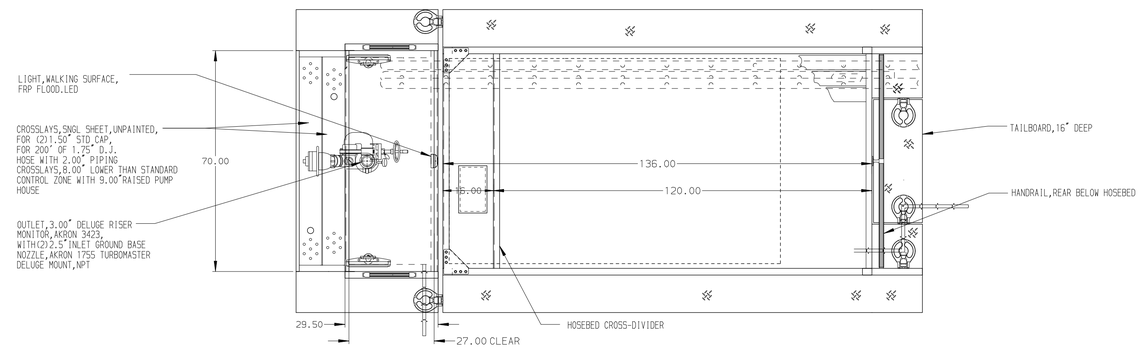

HOSEBED CAPACITIES
1. 1000' OF 5.00" D.J. POLYESTER HOSE
2. 1000' OF 3.00" D.J. POLYESTER HOSE

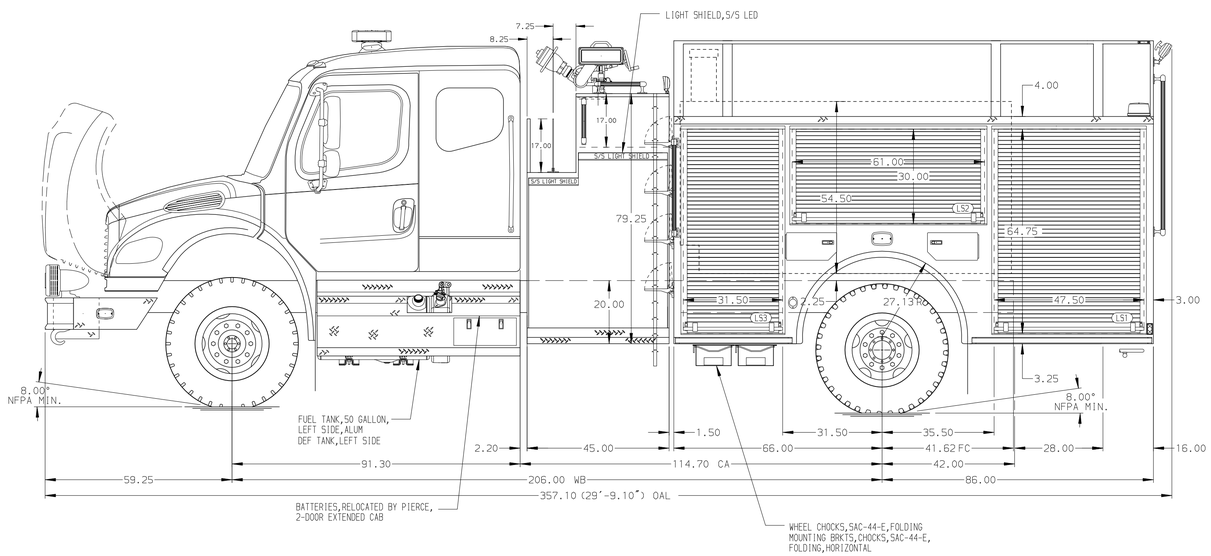

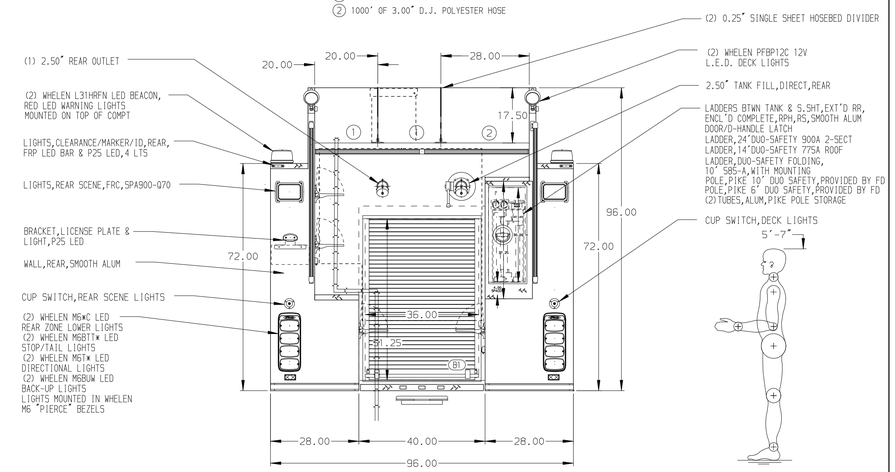

ALUMINUM BODY

NOTE
DIMENSIONS SHOWN ARE APPROXIMATE AND ARE SUBJECT TO MINOR DEVIATIONS AS MAY OCCUR OR BE NECESSARY IN CONSTRUCTION.
MINOR DETAILS NOT SHOWN.

REV.	DATE	BY	CHK'D
▽	-	-	-

CHASSIS DATA
CHASSIS FL
MODEL M2-106

Pierce MANUFACTURING INC.
BRADENTON, FLORIDA

TITLE	1500-D-1000P,152"BDY,LS&RS FL HGT FRT&RR FDLER 45"SIDE CONTROLS,(2)1.5"CROSSLAYS	JOB NO.	37167
		DATE 07MAR22	SCALE 1:24
FOR	WARREN COUNTY FISCAL COURT BOWLING GREEN,KENTUCKY	09MAR22	DRAWN BY JLA
			CHK'D BY RWI
DRWG. NO.	37167AD	SHEET NO. 1 OF 1	SHEET SIZE D

View File Created 09-MAR-2022 07:13:23