Pumper, PUC

BODY
Pumper, PUC, Aluminum

CHASSIS
Impel Chassis, PUC

CHASSIS

AXLE, FRONT, CUSTOM
22,800 lb TAK-4 Axle

AXLE, REAR
31,000 lb Meritor Axle

ENGINE
450 HP Cummins L9 Engine

TRANSMISSION
Allison 5th Gen, 3000 EVS P

BUMPER
10" Extended Stainless Steel

CAB
7010 Impel FR Cab, PUC

BODY

WATER TANK
1000 Gallon Poly Water Tank

COMPT, PUMPER, REAR
40.50" FF Rollup Rear Compt w/Tailboard, PUC

COMPT, PUMPER, LEFT SIDE
214" Rollup Full Height & Depth Front & Rear, PUC

COMPT, PUMPER, RIGHT SIDE
214" Rollup Full Height & Depth Front & Rear, PUC

FIRE SUPPRESSION

PUMPHOUSE
Control Zone, PUC

PUMP
1500 GPM Pierce PUC

CROSSLAYS, 1.50"
(4) 1.50", Poly Trays, 200'

CROSSLAYS, 2.50"
2.50" Crosslay Not Required

GENERATOR
Generator Not Required

Foam System
Husky 3 Foam System

Foam Cell
20 Gallon Foam Cell, Not Reduced Water

Side Roll and Frontal Impact Protection

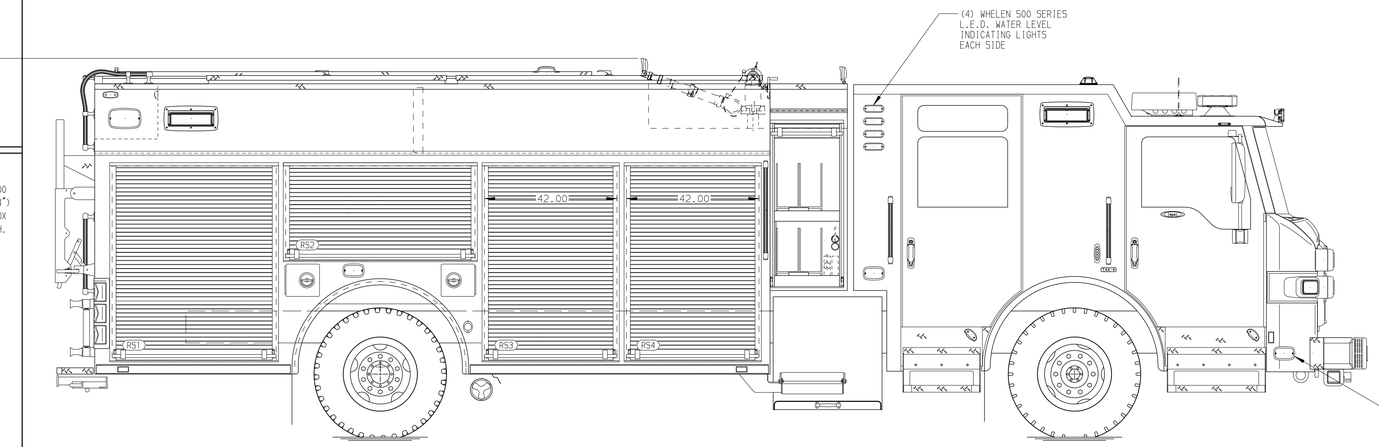

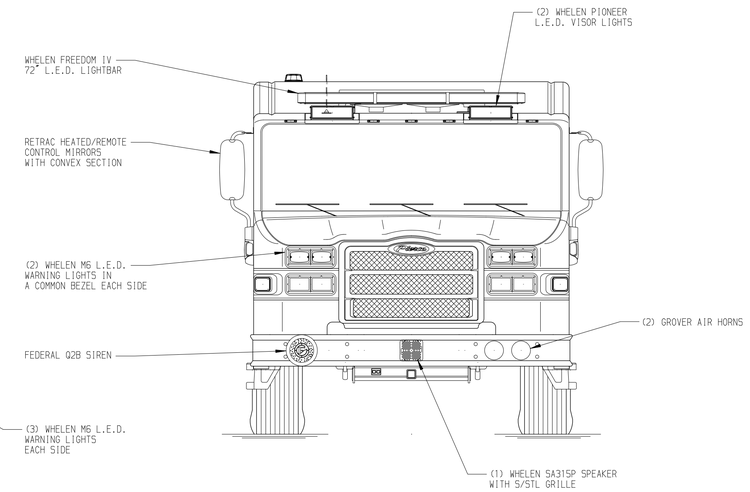

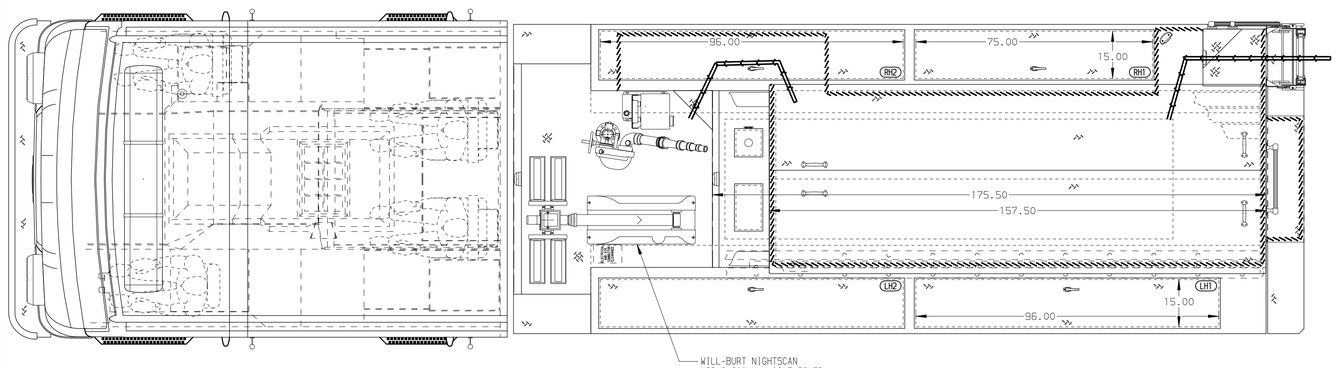

HOSEBED CAPACITY

BED 1
250' OF 2.50" D.J. POLY HOSE

BED 2
800' OF 5.00" D.J. POLY HOSE

BED 3
250' OF 2.50" D.J. POLY HOSE

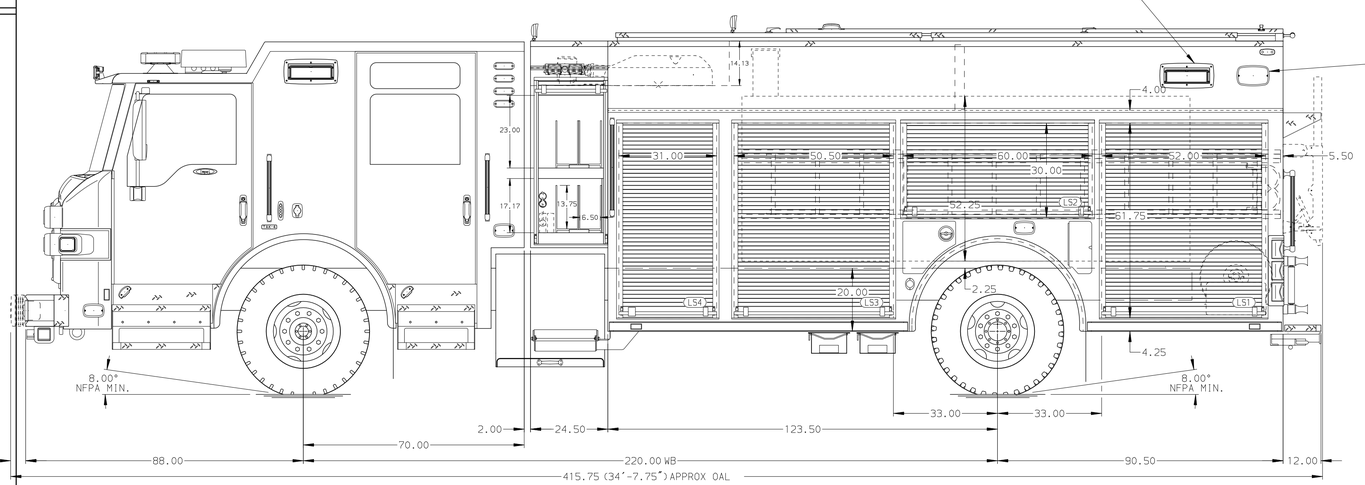

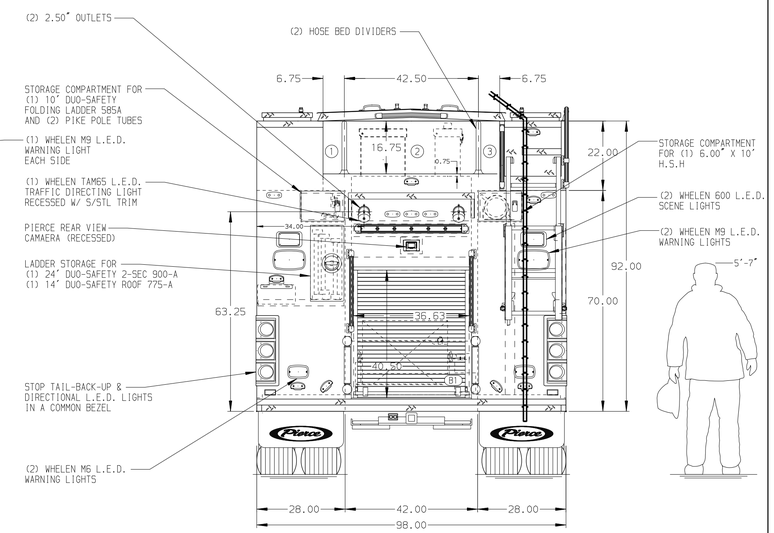

NOTE

DIMENSIONS SHOWN ARE APPROXIMATE AND ARE SUBJECT TO MINOR DEVIATIONS AS MAY OCCUR OR BE NECESSARY IN CONSTRUCTION.
MINOR DETAILS NOT SHOWN.

1. AIR OUTLET WITH SHUT OFF VALVE LOCATED ON DRIVER SIDE PUMP PANEL
2. SHORELINE RECEPTACLE WITH KUSSMAUL SUPER AUTO-EJECT LOCATED ON DRIVER SIDE OF THE CAB
3. BATTERY CHARGER LOCATED IN COMPARTMENT PER SHOP ORDER
4. BATTERY CHARGE INDICATOR LOCATED NEAR DRIVER SEAT RISER WITH BRACKET
5. FIVE ADJUSTABLE SHELVES LOCATED PER SHOP ORDER
6. ONE FLOOR MOUNTED SLIDE-OUT TRAYS LOCATED PER SHOP ORDER
7. TWO ADJUSTABLE SLIDE OUT TRAY LOCATED PER SHOP ORDER
8. TWO TILTING/SLIDE OUT TRAYS LOCATED PER SHOP ORDER
9. ONE SWING-OUT TOOLBOARD LOCATED PER SHOP ORDER
10. FOUR TOOLBOARDS MOUTNED ON SLIDE-OUT TRAYS LOCATED PER SHOP ORDER
11. CTECH FOUR DRAWER ASSEMBLY LOCATED PER SHOP ORDER
12. OIL DRY HOPPER LOCATED IN RIGHT SIDE HATCH COMPARTMENT
13. HANNAY BOOSTER REEL MODEL SBEF34-23-24 WITH CAPACITY FOR 200' OF 1.00" HOSE LOCATED IN COMPARTMENT B1
14. SEVEN 120V RECEPTACLES LOCATED PER SHOP ORDER
15. TWO 120V 6-PLACE RECEPTACLES LOCATED PER SHOP ORDER
16. LITTLE GIANT LADDER TO BE LOCATED PER SHOP ORDER
17. ONE VERTICAL PARTITION LOCATED PER SHOP ORDER
18. TWO PEGBOARDS ON BACK WALL LOCATED PER SHOP ORDER
19. TWO AIR BAGS TROUGHS WILL BE LOCATED PER SHOP ORDER

CUSTOMER APPROVAL

APPROVED BY: _____

DATE: _____

REV	DATE	BY	CH
-	-	-	-

CHASSIS DATA
MAKE: PIERCE
MODEL: IMPEL

Pierce MANUFACTURING INC.

TITLE: Pierce PUC Pumper Approval Drawing
FOR: Mason City Fire Department
DWG NO.: 37256AD

JOB NO.	37256
SCALE	1:24
DATE	07MAR22
DRAWN BY	MMF
CHECKED BY	COL
SHEET SIZE	D
SHEET NO.	1 OF 1

View File Created 07-MAR-2022 11:05:09