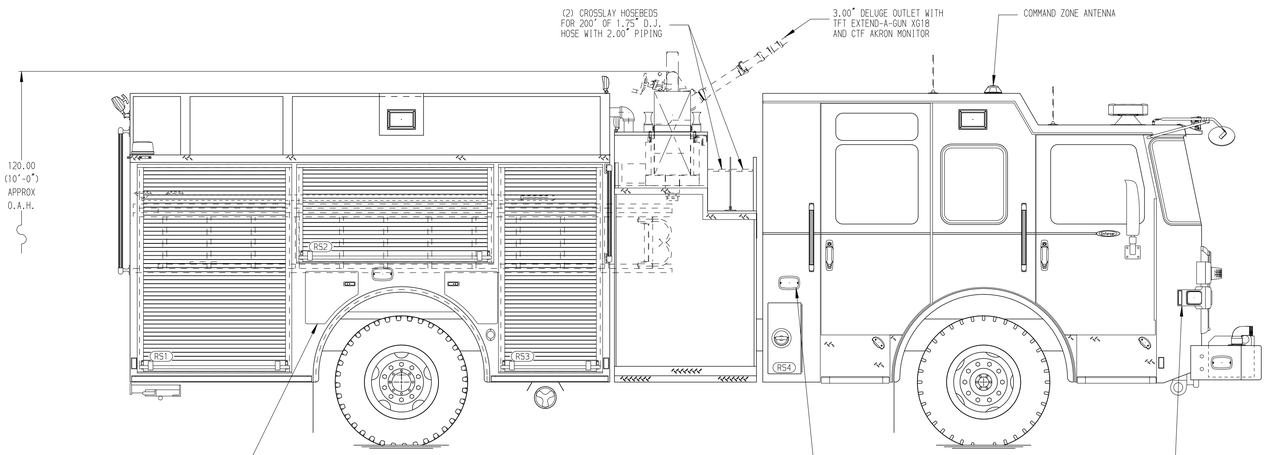

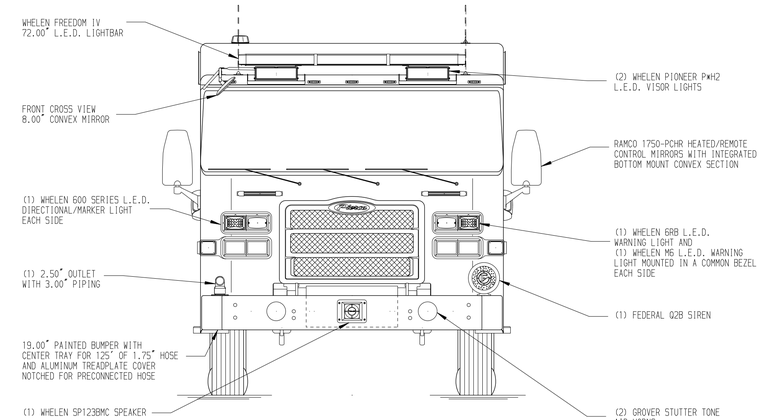

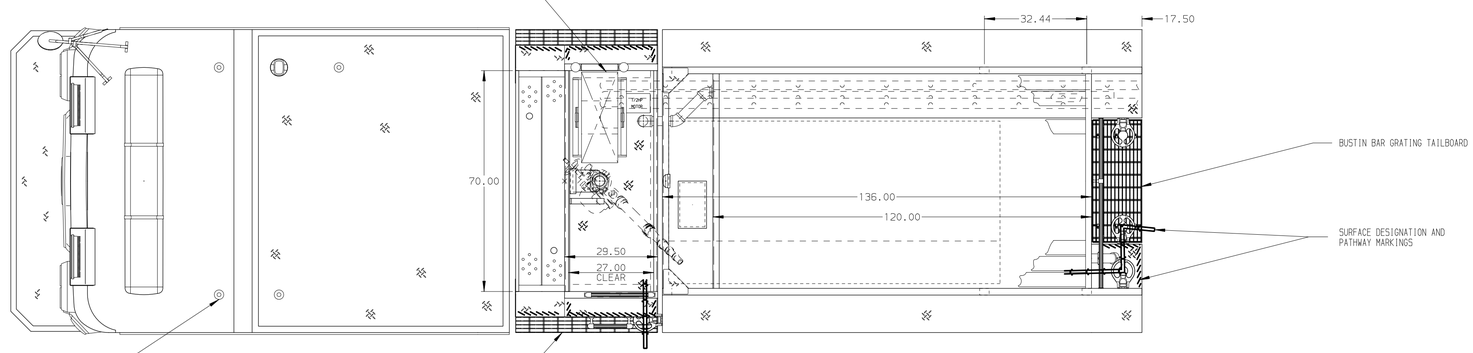

HOSEBED CAPACITIES

1 - 200' OF 2.50" D.J. POLY HOSE
2 - 1500' OF 5.00" D.J. POLY HOSE
3 - 650' OF 2.50" D.J. POLY HOSE

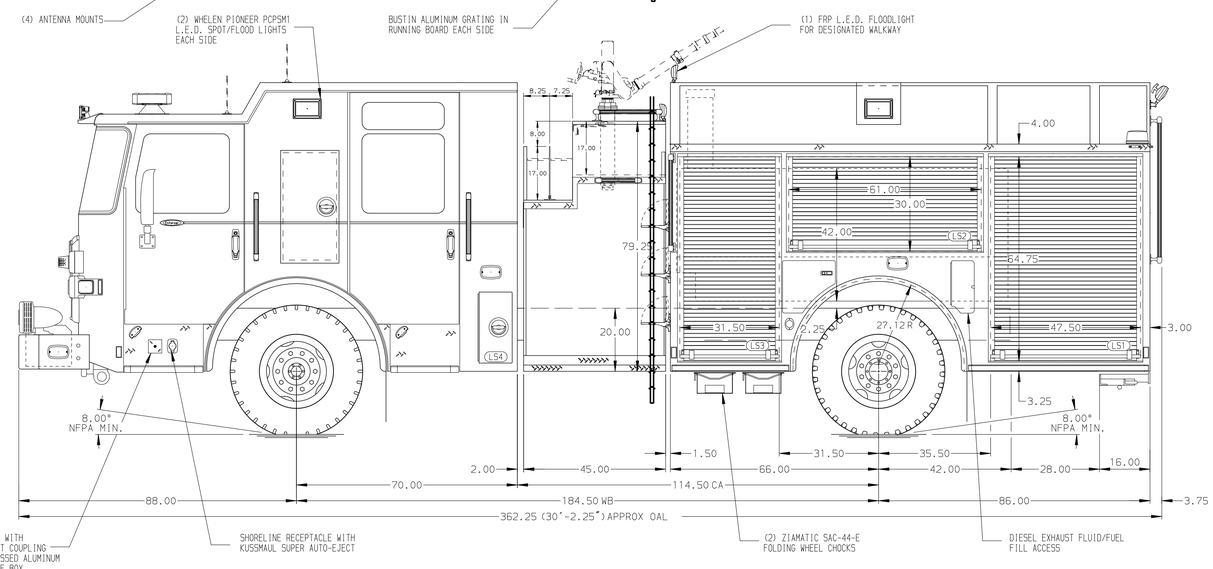

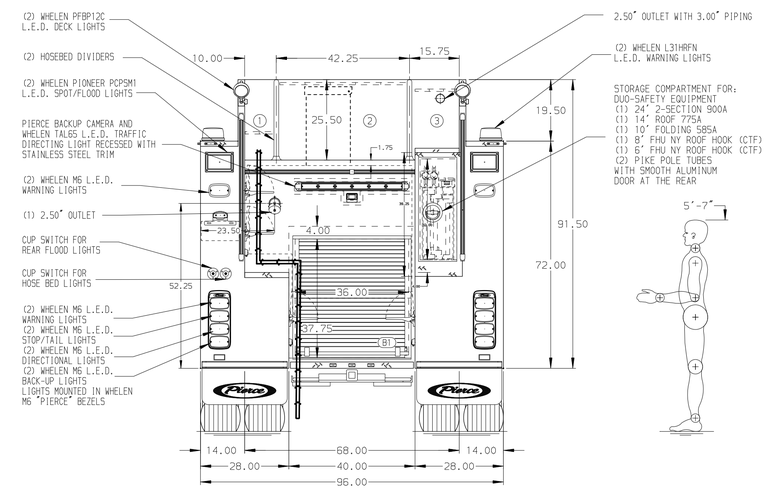

ALUMINUM BODY

SIDE ROLL AND FRONTAL IMPACT PROTECTION

NOTE

DIMENSIONS SHOWN ARE APPROXIMATE AND ARE SUBJECT TO MINOR DEVIATIONS AS MAY OCCUR OR BE NECESSARY IN CONSTRUCTION.
MINOR DETAILS NOT SHOWN.

1. VOGEL LUBE SYSTEM PUMP LOCATED PER SHOP ORDER
2. KUSSMAUL BATTERY CHARGER LOCATED PER SHOP ORDER
3. BATTERY CHARGER MOUNTED BEHIND DRIVER'S SEAT
4. BATTERY CHARGER INDICATOR LOCATED ON DRIVER'S SEAT RISER
5. DUAL L.E.D. LIGHT STRIPS LOCATED IN HOSE BED
6. DRIP PAN GUARD FOR ROLL-UP DOOR LOCATED PER SHOP ORDER

REV	DATE	BY	CH
▽	-	-	-

CUSTOMER APPROVAL

APPROVED BY:

DATE:

Pierce MANUFACTURING INC.

CHASSIS DATA	TITLE	1500-D-750P, 750 GAL WATER TANK, 152" PUMPER BODY (2) XLAYS, DELUGE, BOOSTER REEL, LDDRS BTWN TANK & SS	
MAKE PIERCE	FOR	FAIRFIELD FIRE DEPARTMENT FAIRFIELD, CONNECTICUT	
MODEL ENFORCER	DWG NO.	37295AD-SH1	

JOB NO.	37295
SCALE 1:24	DATE
DRAWN BY JJB	07APR22
CHECKED BY PHA	12APR22
SHEET SIZE D	SHEET NO. 1 OF 2

View File Created 12-APR-2022 10:41:27