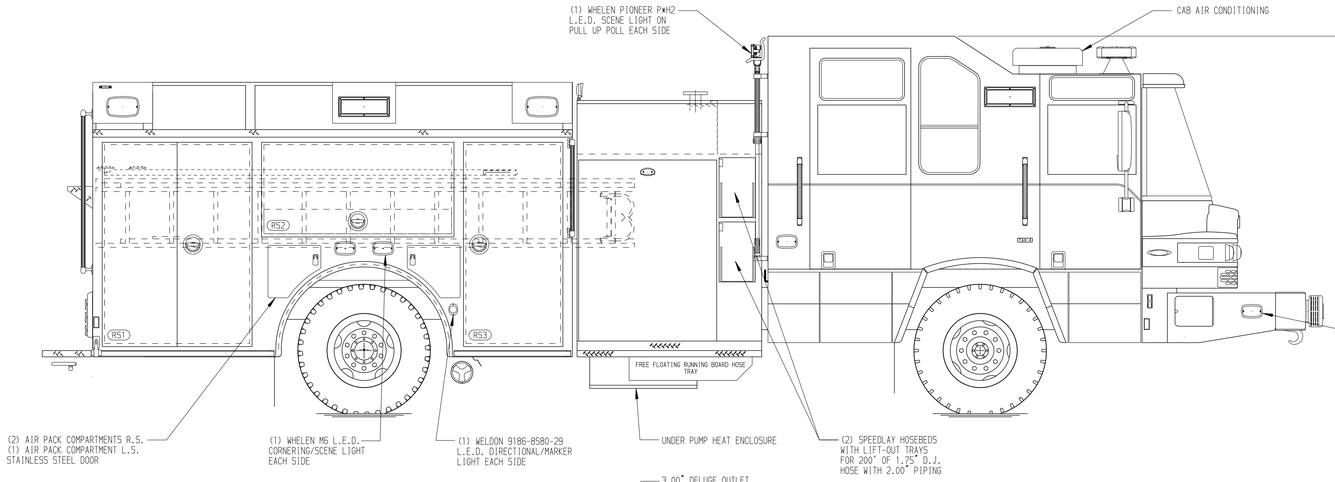

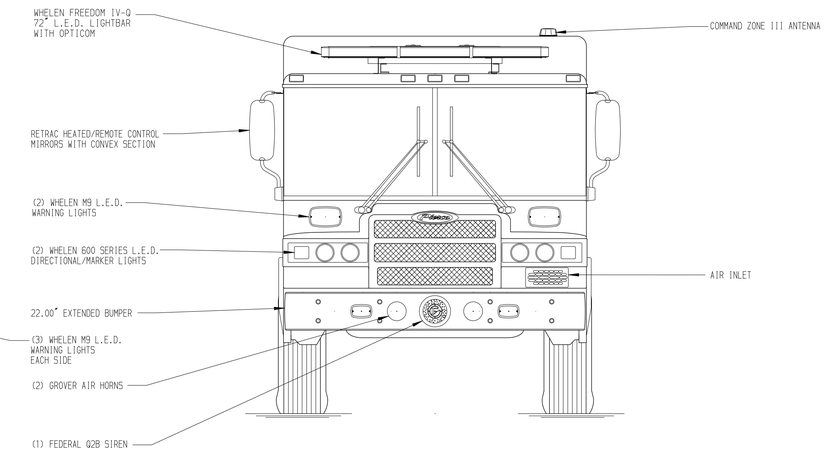

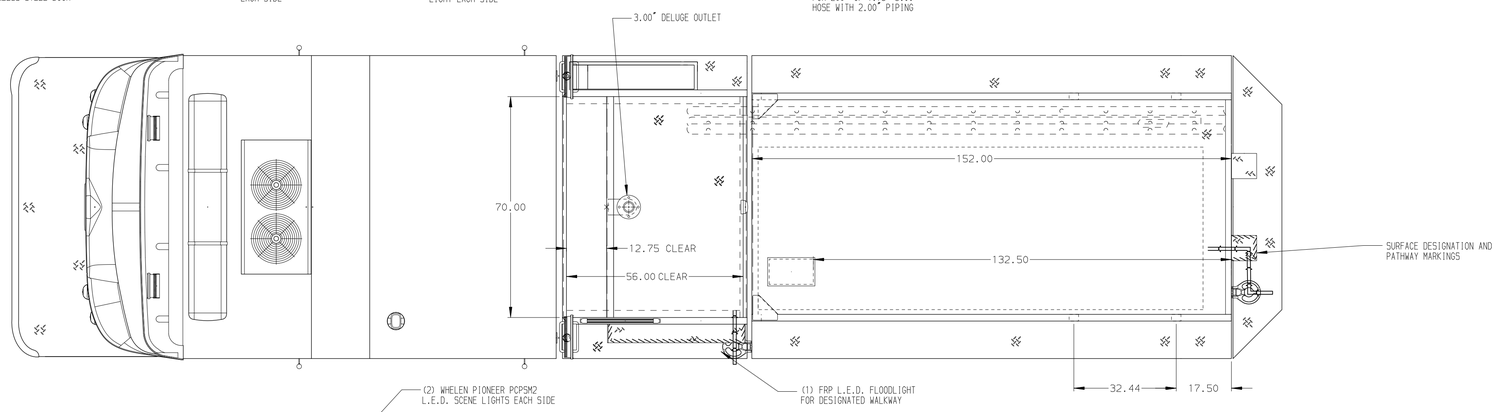

HOSEBED CAPACITIES

1. 1250' OF 5.00" D.J. POLY HOSE
2A. 600' OF 2.50" D.J. POLY HOSE
2B. 100' OF 1.75" D.J. POLY HOSE
3. 200' OF 2.50" D.J. POLY HOSE
4. 100' OF 2.50" D.J. POLY HOSE

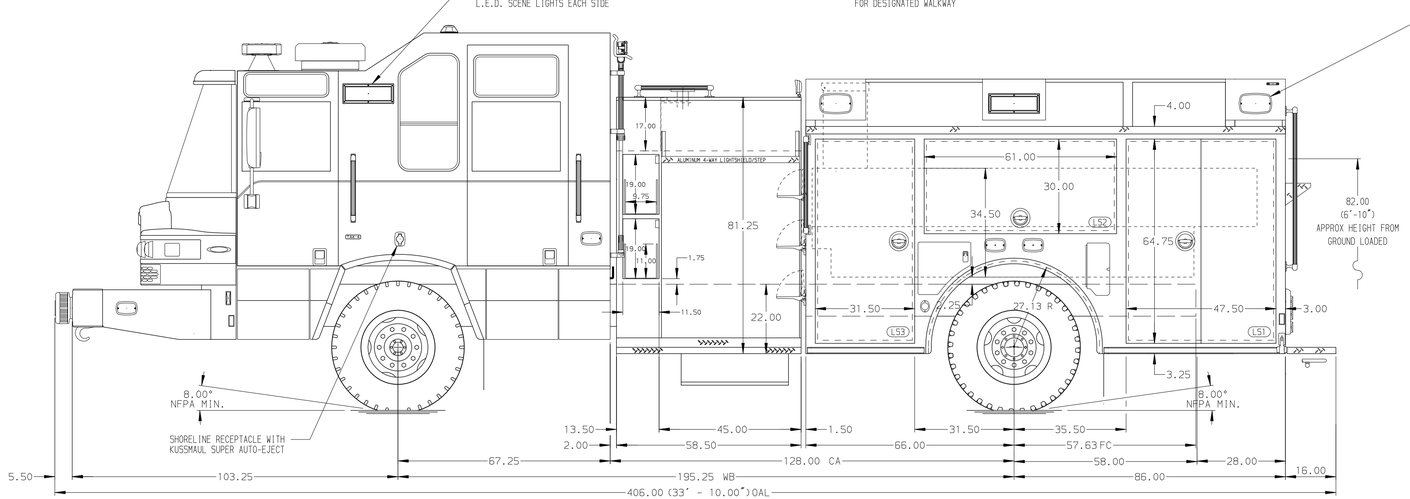

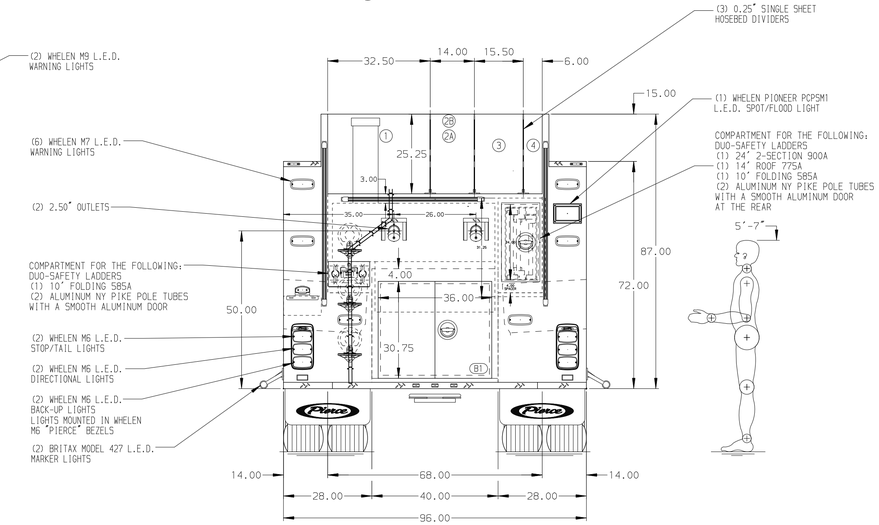

ALUMINUM BODY

SIDE ROLL AND FRONTAL IMPACT PROTECTION

NOTE

DIMENSIONS SHOWN ARE APPROXIMATE AND ARE SUBJECT TO MINOR DEVIATIONS AS MAY OCCUR OR BE NECESSARY IN CONSTRUCTION.
MINOR DETAILS NOT SHOWN.

1. INTERLUBE LUBE SYSTEM PUMP LOCATED PER SHOP ORDER
2. BATTERY CHARGER INDICATOR LOCATED ON DRIVER'S SEAT RISER
3. ELEVEN FULL WIDTH/DEPTH ADJUSTABLE SHELVES LOCATED PER SHOP ORDER
4. ONE ADJUSTABLE SLIDE-OUT TRAY PER SHOP ORDER
5. ONE FLOOR MOUNTED SLIDE-OUT TRAY LOCATED PER SHOP ORDER
6. AIR INLET WITH DISCONNECT FITTING LOCATED ON DRIVER'S SEAT RISER
7. ONE 120V 7-PLACE RECEPTACLE STRIP MOUNTED IN CAB PER SHOP ORDER
8. ONE 120V 7-PLACE RECEPTACLE STRIP MOUNTED IN CAB PER SHOP ORDER

REV	DATE	BY	CH
▽	-	-	-

CUSTOMER APPROVAL

APPROVED BY:

DATE:

Pierce MANUFACTURING INC.

CHASSIS DATA	TITLE	2000-D-750P, 750G WATER, 152" BODY FDLER (2) SPEEDLAYS, RS LADDER STORAGE BETWEEN BODY & S.S	JOB NO. 37291
MAKE PIERCE	FOR	MOUNT PROSPECT FIRE DEPARTMENT MOUNT PROSPECT, ILLINOIS	SCALE 1:24 / DATE
MODEL QUANTUM	DWG NO.	37297AD	DRAWN BY JWO / 15APR22
			CHECKED BY CZA / 15ARP22
			SHEET SIZE D / SHEET NO. 1 OF 1

View File Created 15-APR-2022 11:52:55