Pumper, PUC

BODY
Pumper, PUC, Aluminum

CHASSIS
Enforcer Chassis, PUC

CHASSIS

AXLE, FRONT, CUSTOM
18,000 Lb Dana Axle

AXLE, REAR
31,000 Lb Dana Axle

ENGINE
380 HP Cummins L9 Engine

TRANSMISSION
Allison 5th Gen, 3000 EVS P

BUMPER
19" Extended Painted Steel

CAB
7010 Enforcer Cab, PUC

BODY

WATER TANK
1000 Gallon Poly Water Tank

COMPT, PUMPER, REAR
39.50" FF Space Saver, PUC

COMPT, PUMPER, LEFT SIDE
177" Rollup Full Height & Depth Front & Rear, PUC

COMPT, PUMPER, RIGHT SIDE
177" Rollup Full Height & Depth Front & Rear, PUC

FIRE SUPPRESSION

PUMPHOUSE
Control Zone, PUC

PUMP
1500 GPM Pierce PUC

CROSSLAYS, 1.50"
(2) 1.50", Poly Trays, 200'

CROSSLAYS, 2.50"
(1) 2.50", Poly Tray, 200'

GENERATOR
Generator Not Required

Foam System
Foam System Not Required

Foam Cell
Foam Cell Not Required

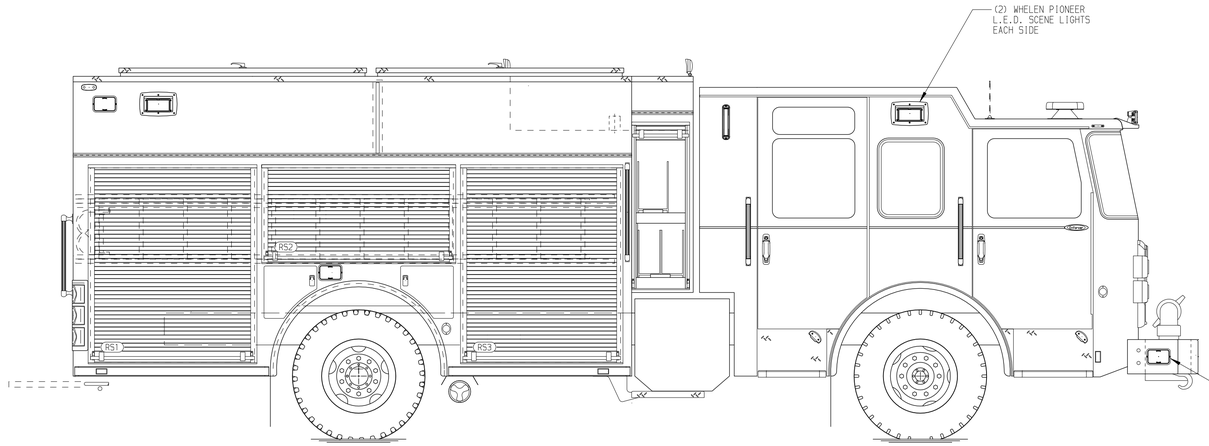

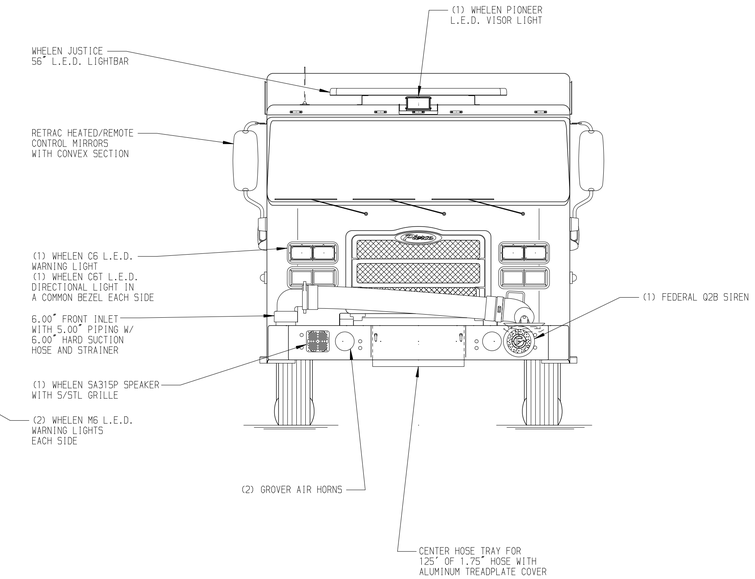

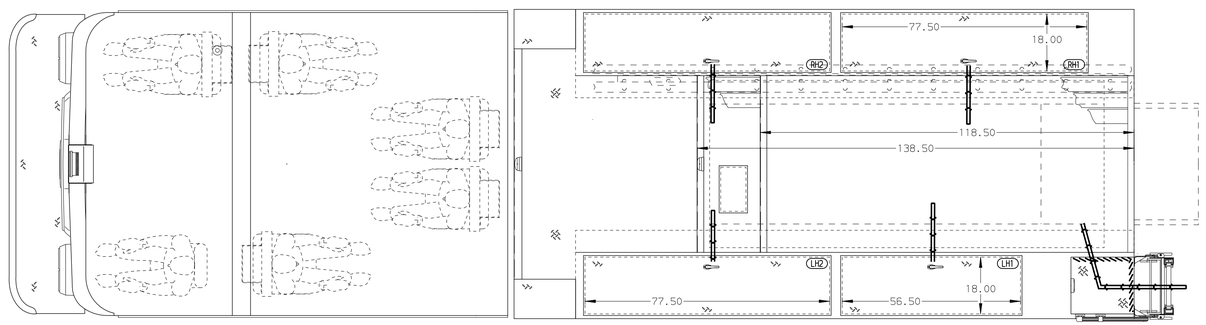

HOSEBED CAPACITY

BED 1
200' OF 2.50" D.J. POLY HOSE

BED 2
600' OF 5.00" D.J. POLY HOSE

BED 3
300' OF 2.50" D.J. POLY HOSE

BED 4
400' OF 1.75" D.J. POLY HOSE

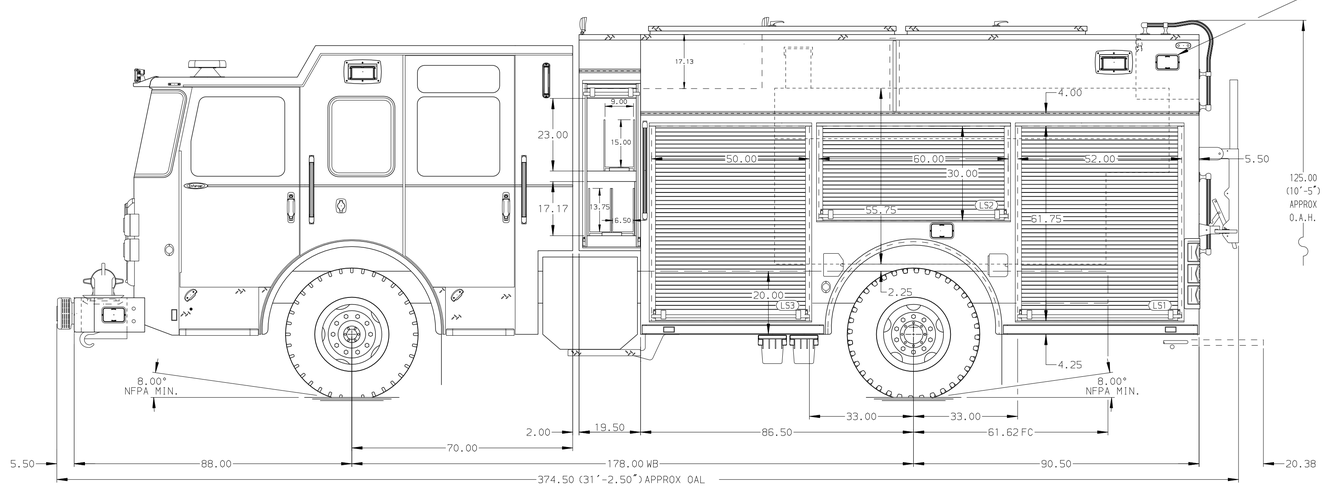

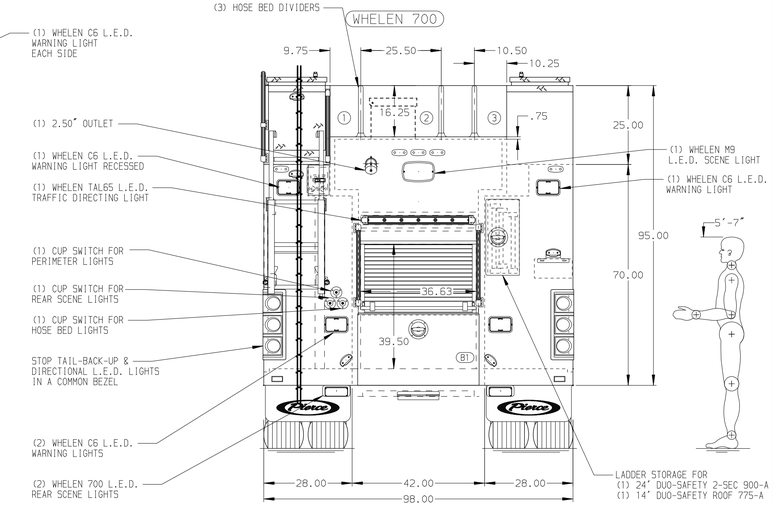

Pierce MANUFACTURING INC.

JOB NO.	37308
SCALE	1:24
DATE	
DRAWN BY	MMF
	15SEP21
CHECKED BY	COL
	15SEP21
SHEET SIZE	D
SHEET NO.	1 OF 1

TITLE: Pierce PUC Pumper Approval Drawing
–

FOR: Stockbridge-Munsee Fire Department
–

DWG NO.: 37308AD

CHASSIS DATA
MAKE: PIERCE
MODEL: ENFORCER

REV	DATE	BY	CH
B	22DEC21	MMF	AST
A	29OCT21	MMF	AST

NOTE

DIMENSIONS SHOWN ARE APPROXIMATE AND ARE SUBJECT TO MINOR DEVIATIONS AS MAY OCCUR OR BE NECESSARY IN CONSTRUCTION.
MINOR DETAILS NOT SHOWN.

1. ONE 1.50 OUTLET WITH 2.00 PIPING AND SWIVEL LOCATED IN CENTER BUMPER TRAY
2. SHORELINE RECEPTACLE WITH KUSSMAUL SUPER AUTO-EJECT LOCATED ON DRIVER SIDE OF THE CAB
3. AIR INLET WITH DISCONNECT COUPLING IN THE DRIVER SIDE STEPWELL
4. BATTERY CHARGER LOCATED IN COMPARTMENT PER SHOP ORDER
5. BATTERY CHARGE INDICATOR LOCATED ON THE DRIVER SIDE SEAT RISER
6. SIX ADJUSTABLE SHELVES PER ORDER
7. ONE FLOOR MOUNTED SLIDE-OUT TRAY PER ORDER
8. ONE TILTING/SLIDE-OUT TRAY LOCATED PER ORDER
9. ONE SWING-OUT TOOLBOARD LOCATED PER SHOP ORDER

View File Created 22-DEC-2021 13:32:04