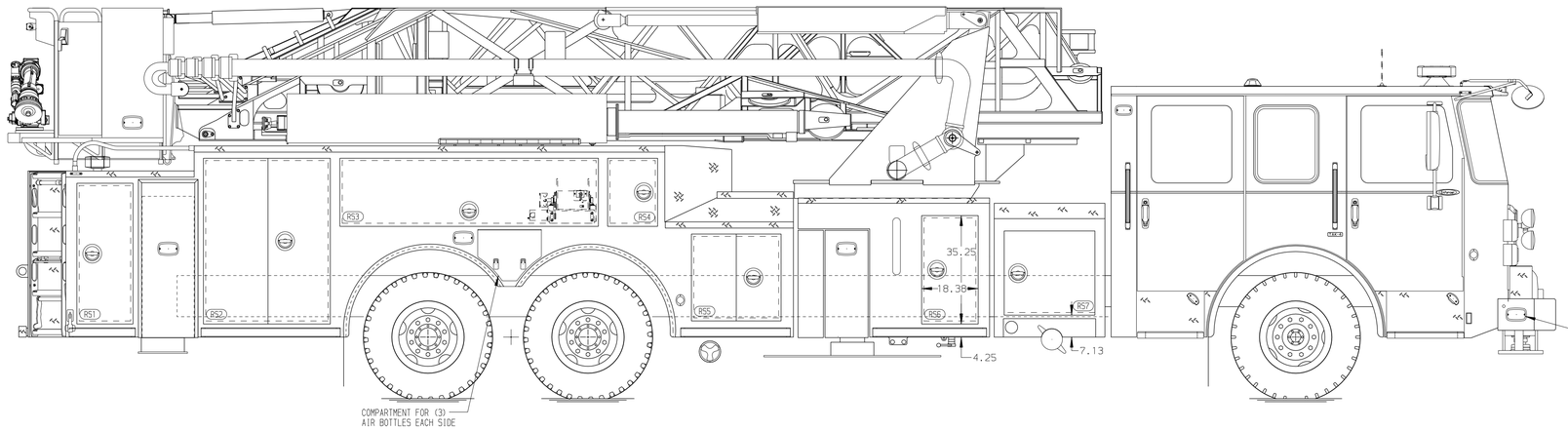

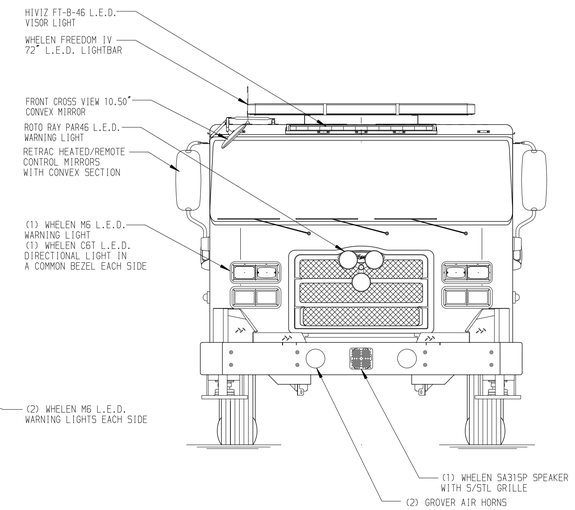

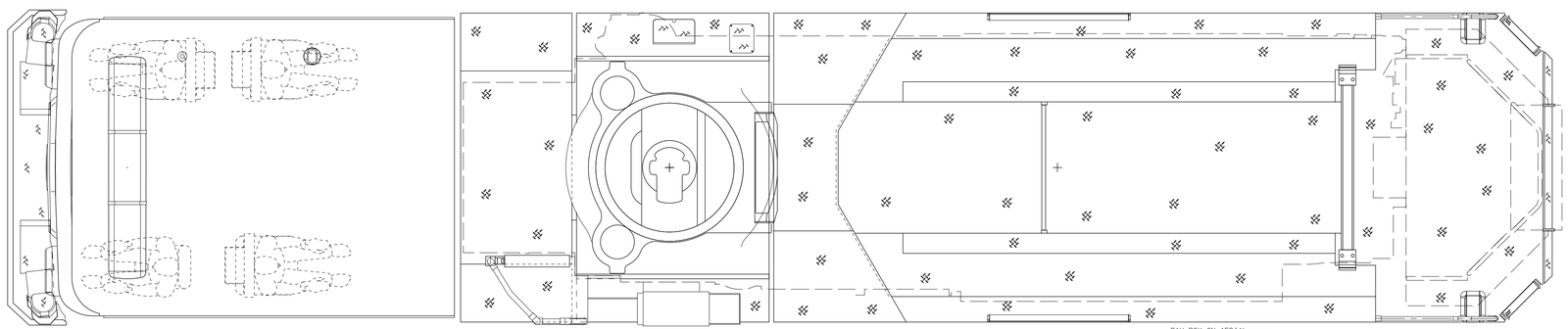

BODY

100' Ascendant Aerial Tower No Pump Alum Body

COMPT,LEFT SIDE

Full Height Lap Doors

COMPT,RIGHT SIDE

Full Height Lap Doors

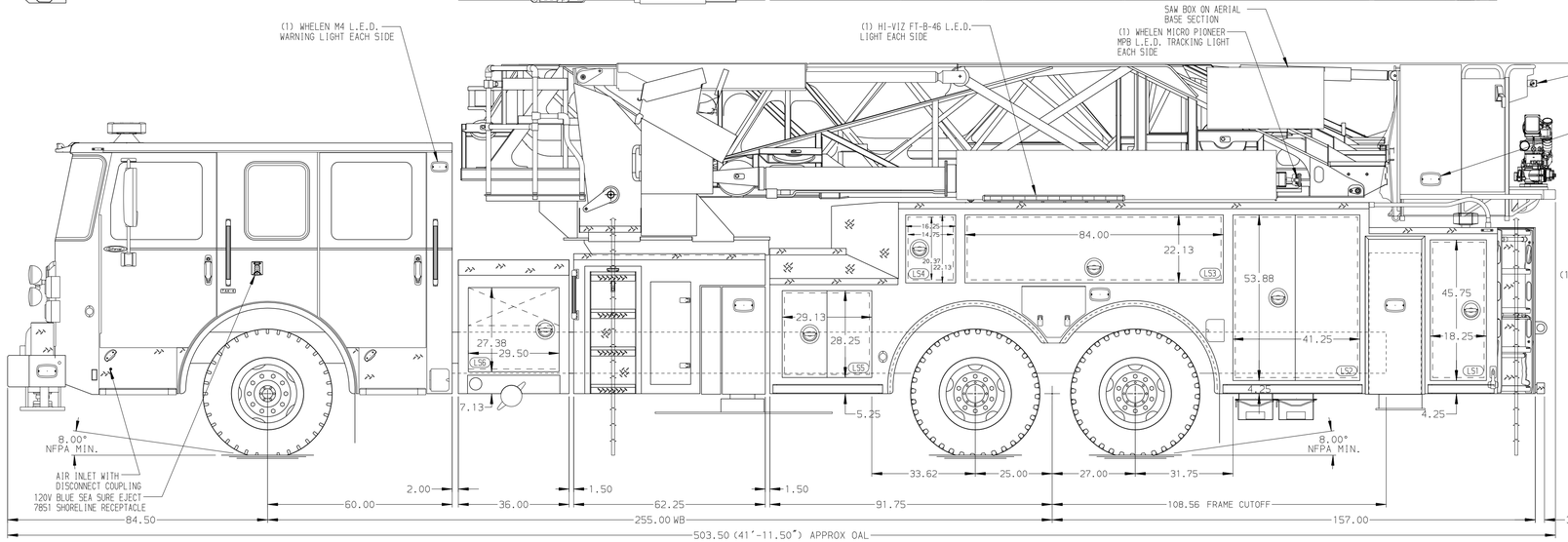

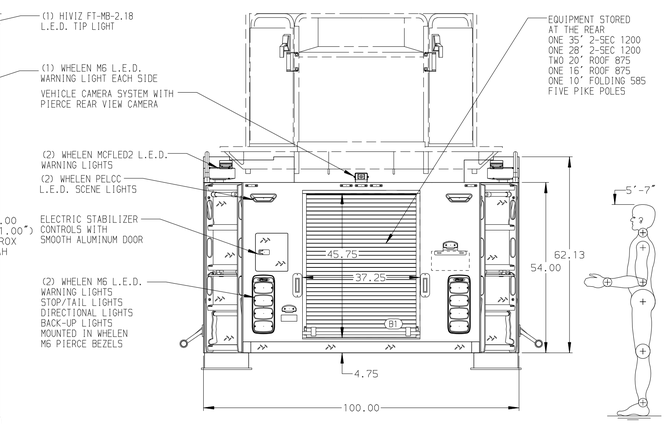

CHASSIS	CAB	AXLE,FRONT,CUSTOM	TRANSMISSION	COMPARTMENT-NO PUMP	-
Enforcer Chassis	6000 Enforcer Cab	24,000 Lb TAK-4 Axle	ALlison 5th Gen, 4000 EVS P	36" Compartment,No Pump,Lap Door	-
ENGINE	BUMPER	AXLE,REAR	GENERATOR		-
510 HP Paccar MX13 Engine	15" Painted Aluminum	48,000 Lb Meritor Axle	Harrison 8kw MID 8.0		

CUSTOMER APPROVAL

APPROVED BY: _____

DATE: _____

Pierce MANUFACTURING INC.

NOTE

DIMENSIONS SHOWN ARE APPROXIMATE AND ARE SUBJECT TO MINOR DEVIATIONS AS MAY OCCUR OR BE NECESSARY IN CONSTRUCTION.
MINOR DETAILS NOT SHOWN.

1. PACCAR DEF TANK MOUNTED UNDER CAB ON THE DRIVER'S SIDE
2. BATTERY CHARGER LOCATED BEHIND DRIVER SEAT
3. BATTERY CHARGER INDICATOR LOCATED ON DRIVER'S SEAT RISER
4. FOUR ADJUSTABLE FULL WIDTH/FULL DEPTH SHELVES IN COMPARTMENT PER ORDER
5. ONE FLOOR MOUNTED SLIDE-OUT TRAY IN COMPARTMENT PER ORDER
6. ONE SLIDE-OUT TOOL BOARD WITH PEGBOARD PATTERN IN COMPARTMENT PER ORDER
7. PAC TRAC ON BACK WALL OF COMPARTMENT PER ORDER
8. HARRISON 8KW MIDB.0 HYDRAULIC GENERATOR LOCATED IN REAR COMPARTMENT PER ORDER
9. CIRCUIT BREAKER PANEL LOCATED IN COMPARTMENT PER SHOP ORDER
10. TECNIQ L.E.D. RUNG STYLE LIGHTING ON AERIAL LADDER SECTIONS PER SHOP ORDER
11. DC POWER TO AERIAL BASKET
12. 2-WAY INTERCOM SYSTEM BETWEEN AERIAL TIP OR PLATFORM AND TURNTABLE
13. ONE HANNAY ELECTRIC REWIND CORD REEL MODEL ELFCR1618-14-16 WITH 200' OF 12/3 CABLE
14. ONE 120V DUPLEX 4-PLACE RECEPTACLE IN CAB PER ORDER

REV	DATE	BY	CH
▽	-	-	-

CHASSIS DATA

MAKE: PIERCE

MODEL: -

TITLE: 100' ASCENDANT AERIAL TOWER AND BODY ASSEMBLY
-

FOR: OMAHA FIRE DEPARTMENT
-

DWG NO.: 37357AD

JOB NO.	37357 01-02
SCALE	1:24
DATE	
DRAWN BY	JGA
07JAN22	
CHECKED BY	JBL
10JAN22	
SHEET SIZE	D
SHEET NO.	1 OF 1

View File Created 10-JAN-2022 09:13:28