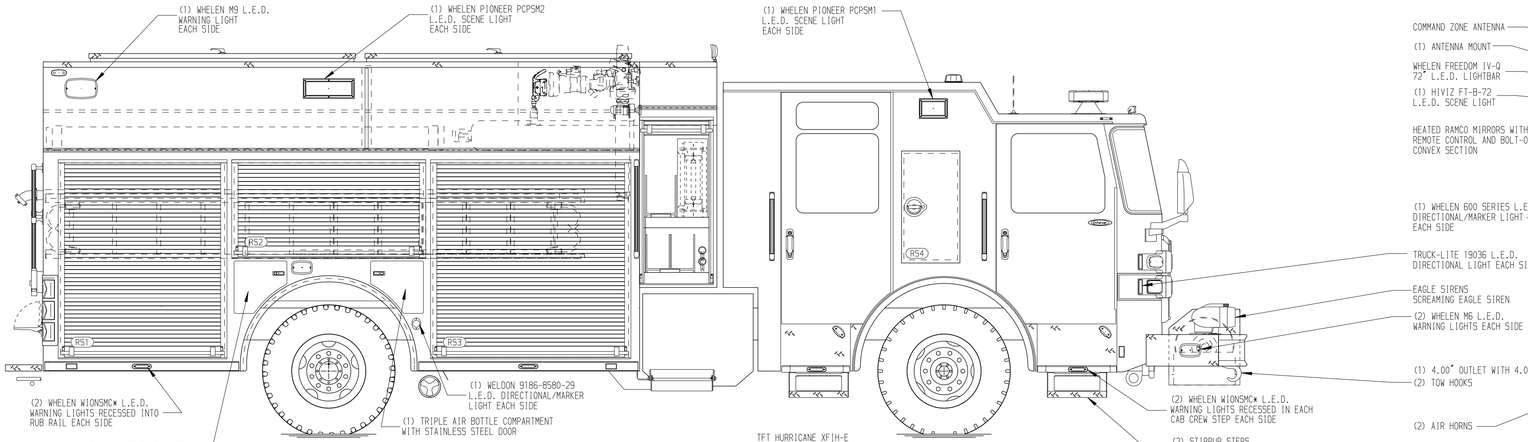

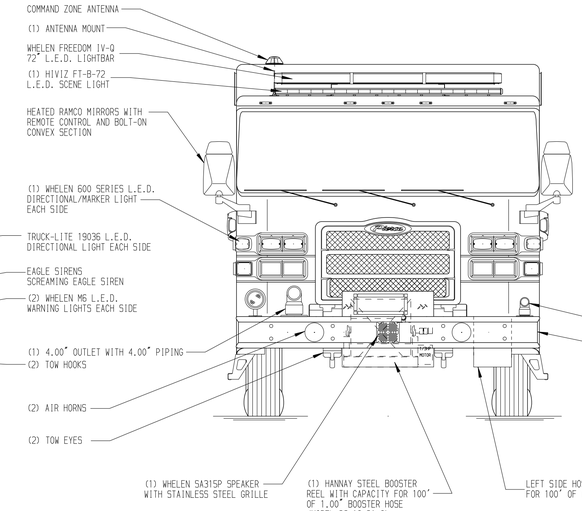

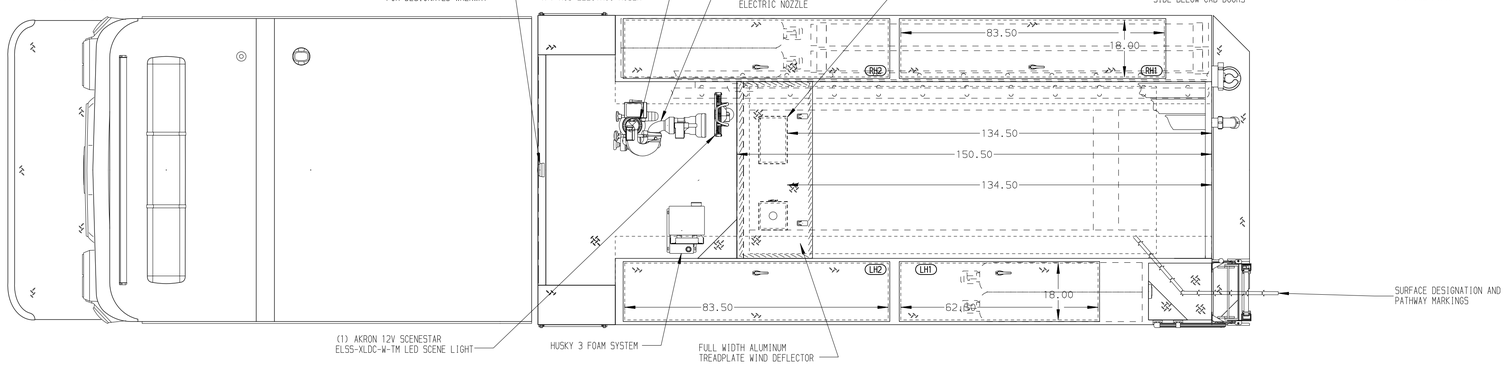

HOSEBED CAPACITIES

1. 1200' OF 5.00" SUPPLY HOSE
2. 400' OF 3.00" D.J. POLY HOSE
3. 200' OF 2.50" D.J. POLY HOSE

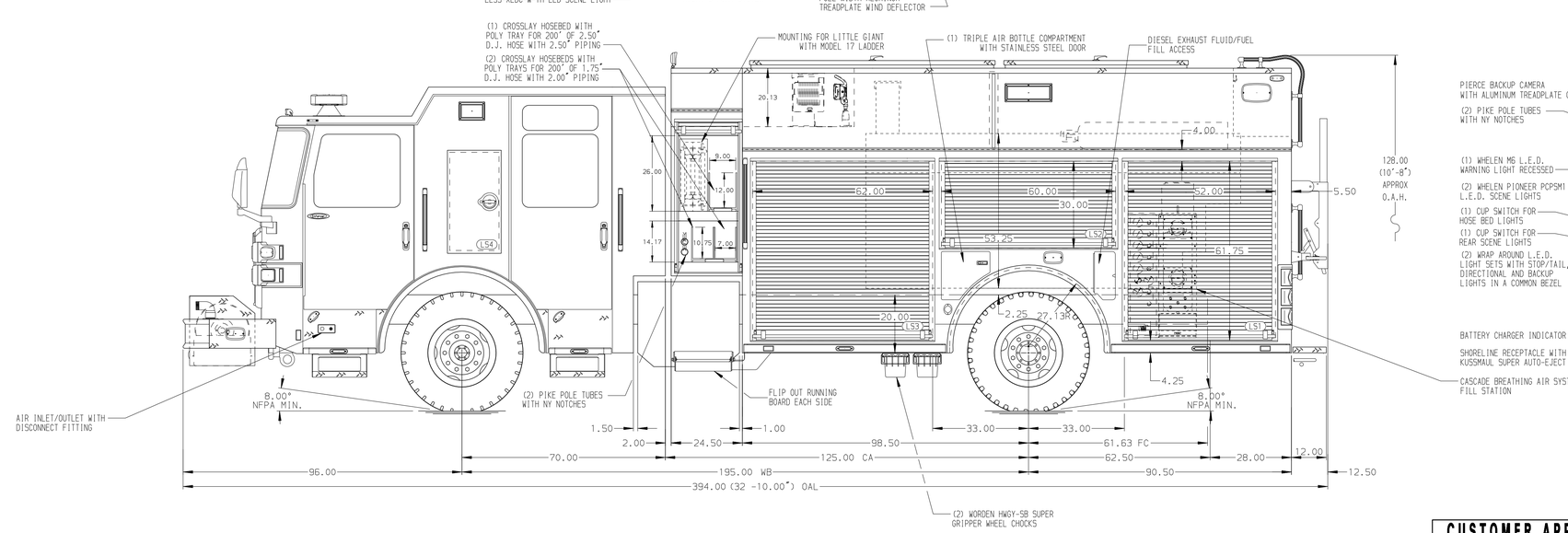

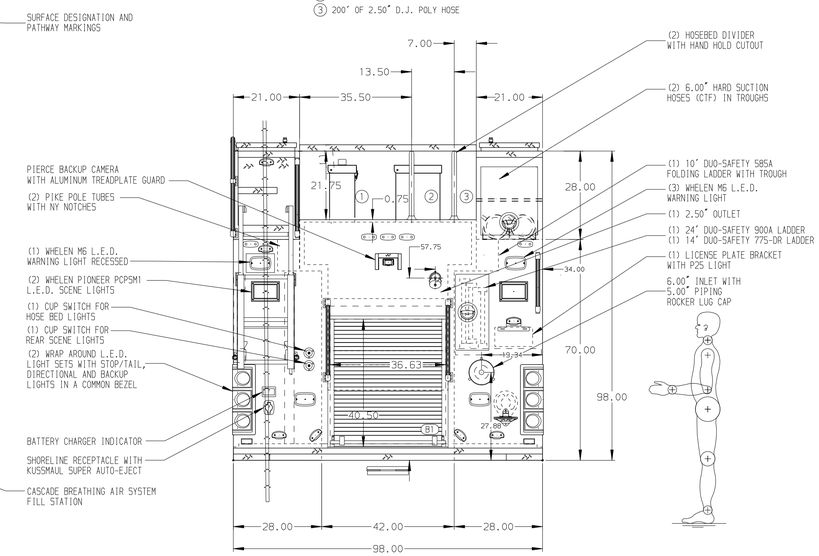

ALUMINUM BODY

NOTE

DIMENSIONS SHOWN ARE APPROXIMATE AND ARE SUBJECT TO MINOR DEVIATIONS AS MAY OCCUR OR BE NECESSARY IN CONSTRUCTION.
MINOR DETAILS NOT SHOWN.

1. KUSSMAUL BATTERY CHARGER LOCATED PER ORDER
2. BATTERY CHARGER LOCATED PER ORDER
3. DUAL L.E.D. LIGHT STRIPS LOCATED IN HOSE BED
4. SIX FULL WIDTH/DEPTH ADJUSTABLE SHELVES IN COMPARTMENTS PER ORDER
5. TWO FLOOR MOUNTED SLIDE-OUT TRAYS IN COMPARTMENTS PER ORDER
6. TWO ALUMINUM SWING-OUT TOOLBOARD IN COMPARTMENTS PER ORDER
7. ONE VERTICAL PARTITION IN COMPARTMENT LOCATED PER ORDER
8. 4-SLOT AIR BAG RACK IN COMPARTMENT LOCATED PER ORDER
9. HOSE STORAGE RACK WITH ADJUSTABLE DIVIDERS FOR ROLLED HOSE IN COMPARTMENT PER ORDER
10. C-TECH DRAWERS LOCATED PER ORDER

REV	DATE	BY	CH
▽	-	-	-

CHASSIS DATA
MAKE: PIERCE
MODEL: ENFORCER

CUSTOMER APPROVAL
APPROVED BY:
DATE:

Pierce MANUFACTURING INC.

TITLE: 1500-D-1000P, 970 GAL OF WATER W/ 30 GAL FOAM CELL 189" PUC RESCUE, LADDERS THRU BODY, (3) CROSSLAYS
FOR: STATESBORO FIRE DEPARTMENT TEN-8 FIRE & SAFETY, LLC
DWG NO.: 37396AD

JOB NO.	SCALE	DRAWN BY	CHECKED BY	SHEET SIZE	SHEET NO.
37395	1:24	BTH	PHA	D	1 OF 1
	DATE	11MAY22	23MAY22		

View File Created 23-MAY-2022 14:43:34