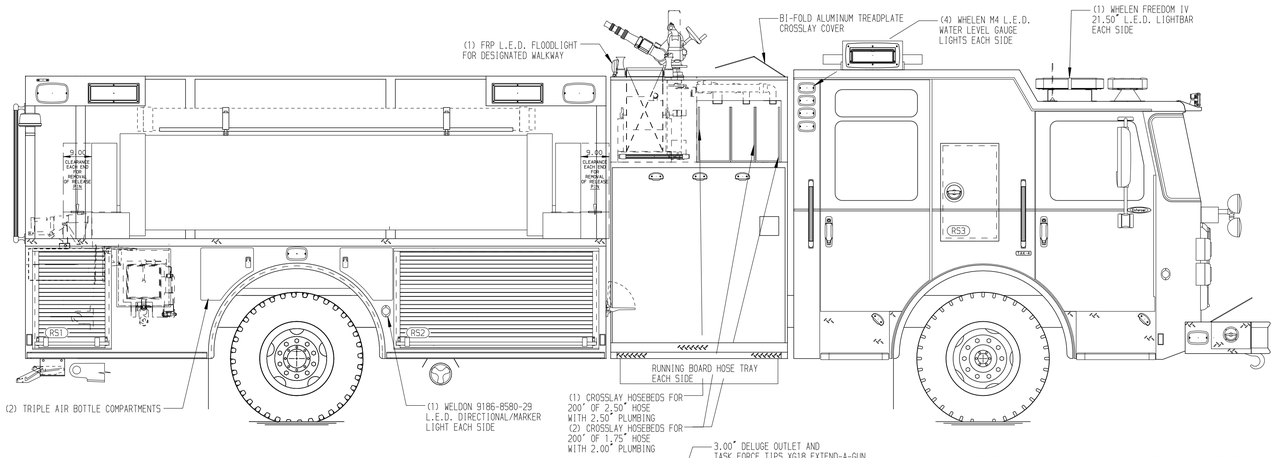

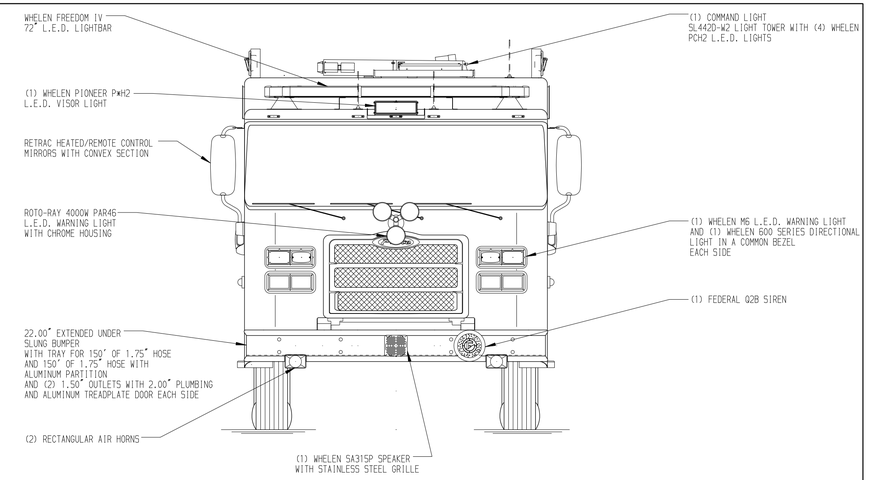

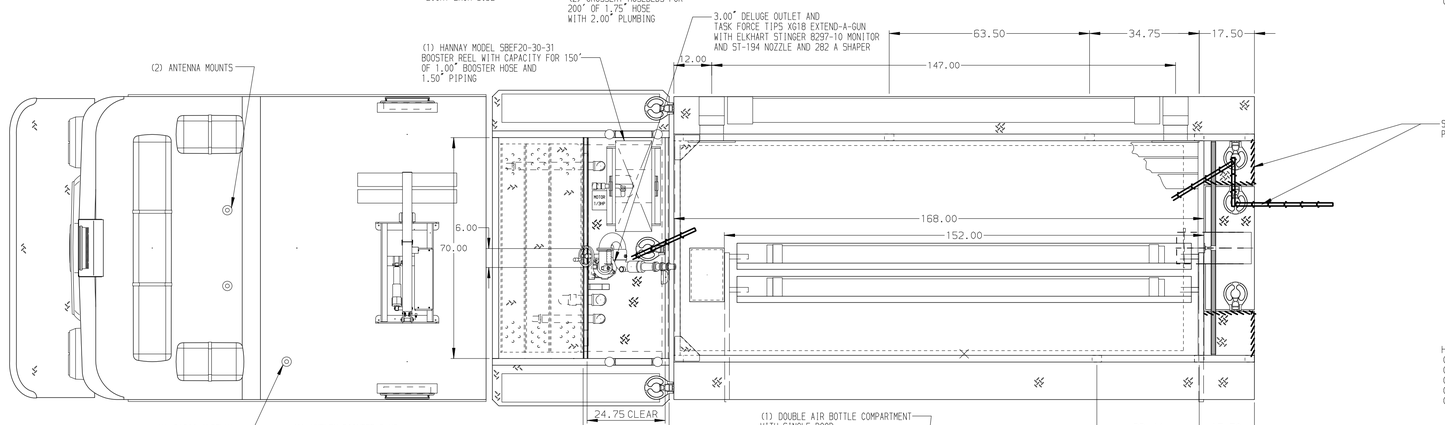

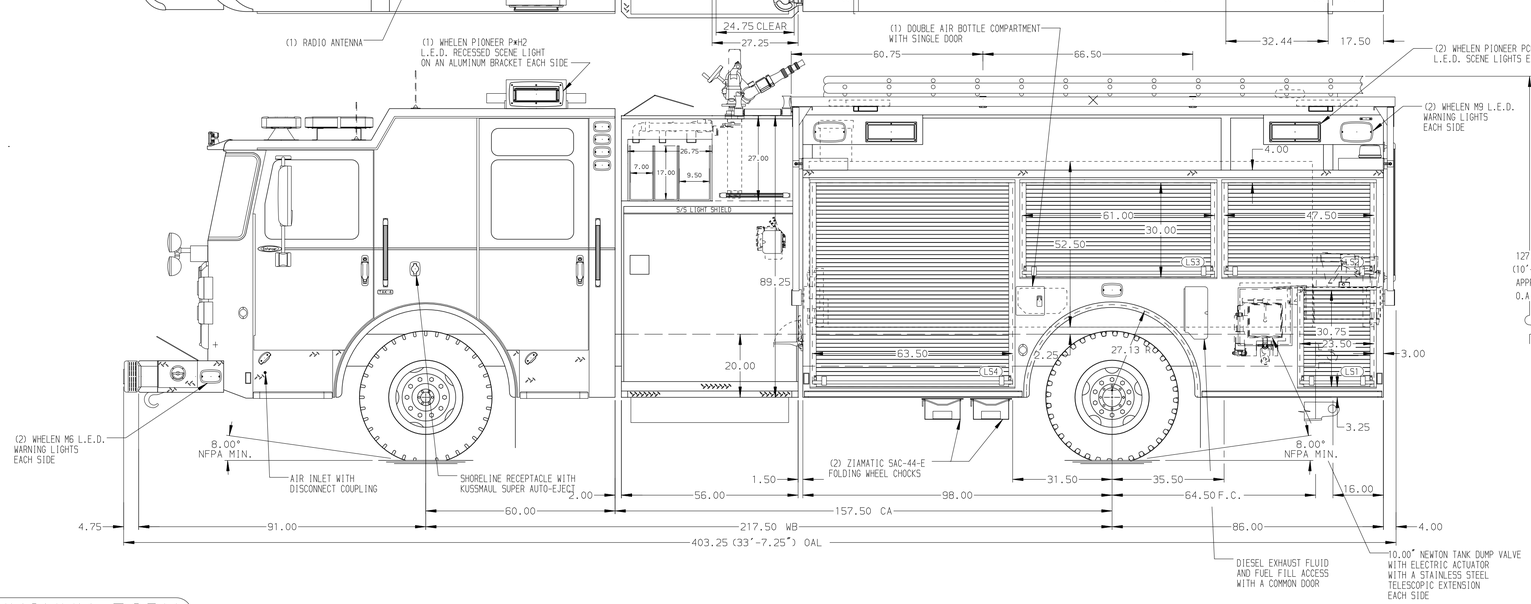

HOSEBED CAPACITIES

1. 1000' OF 5.00" D.J. POLY HOSE
2. 800' OF 3.00" D.J. POLY HOSE

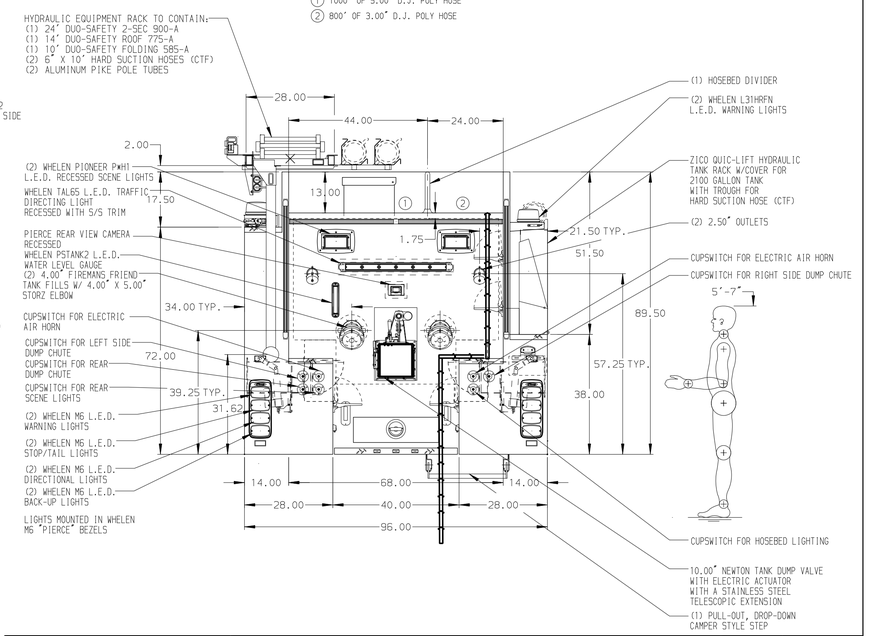

ALUMINUM BODY

NOTE

DIMENSIONS SHOWN ARE APPROXIMATE AND ARE SUBJECT TO MINOR DEVIATIONS AS MAY OCCUR OR BE NECESSARY IN CONSTRUCTION.
MINOR DETAILS NOT SHOWN.

1. ONSPOT AUTOMATIC TIRE CHAINS TO BE PROVIDED AT REAR
2. PAC TRAC IN CAB PER SHOP ORDER
3. BATTERY CHARGER LOCATED PER SHOP ORDER
4. BATTERY CHARGER INDICATOR LOCATED PER SHOP ORDER
5. DUAL L.E.D. LIGHT STRIPS LOCATED IN HOSE BED
6. FOUR FULL WIDTH/DEPTH ADJUSTABLE SHELVES LOCATED PER SHOP ORDER
7. TWO FLOOR MOUNTED SLIDE-OUT TRAYS LOCATED PER SHOP ORDER
8. ONE L-SHAPED SLIDE-OUT TOOLBOARD LOCATED PER SHOP ORDER
9. ONE 3/16" ALUMINUM MOUNTING PLATE LOCATED PER SHOP ORDER
10. ONE RACK FOR THREE EXTINGUISHERS LOCATED PER SHOP ORDER
11. XANTREX XPOWER 450 INVERTER LOCATED PER SHOP ORDER

REV	DATE	BY	CH
▽	-	-	-

CUSTOMER APPROVAL

APPROVED BY: _____

DATE: _____

Pierce MANUFACTURING INC.

CHASSIS DATA	
MAKE	PIERCE
MODEL	ENFORCER
TITLE	1500-D-1800P,184",FULL HEIGHT LS,LOW RS,FDLER (3) X-LAYS,DELUGE,HOSE REEL,TANK RUMPS
FOR	WOODLEAF VOLUNTEER FIRE DEPARTMENT WOODLEAF, NORTH CAROLINA
DWG NO.	37491AD
JOB NO.	37491
SCALE	1:24
DATE	
DRAWN BY	LST 06JUL22
CHECKED BY	CDU 08JUL22
SHEET SIZE	D
SHEET NO.	1 OF 1

View File Created 08-JUL-2022 09:25:26