PUMPER

BODY
Long Aluminum 2nd Gen Pumper

CHASSIS
Enforcer Chassis

CHASSIS

AXLE, FRONT, CUSTOM
22,800 lb TAK-4 Axle

AXLE, REAR
24,000 lb Meritor Axle

ENGINE
450 HP Cummins L9 Engine

TRANSMISSION
Allison 5th Gen, 3000 EVS P

BUMPER
22" Extended Stainless Steel

CAB
7010 Enforcer Cab

BODY

WATER TANK
750 Gallon New York Style Water Tank

COMPT, PUMPER, REAR
30.75" FF Rollup Rear Compt

COMPT, PUMPER, LEFT SIDE
161" Rollup Full Height Front & Rear FDLER

COMPT, PUMPER, RIGHT SIDE
161" Rollup Full Height & Depth Front & Rear

FIRE SUPPRESSION

PUMPHOUSE
45" Control Zone Side Mount

PUMP
1500 GPM Waterous CSU

CROSSLAYS, 1.50"
1.50" Crosslays Not Required

CROSSLAYS, 2.50"
2.50" Crosslay Not Required

SPEEDLAYS
(2) 1.50" Std. Capacity

GENERATOR
Generator Not Required

Foam System
FoamPro 1600

Foam Cell
30 Gal Foam Cell, Not Reduce

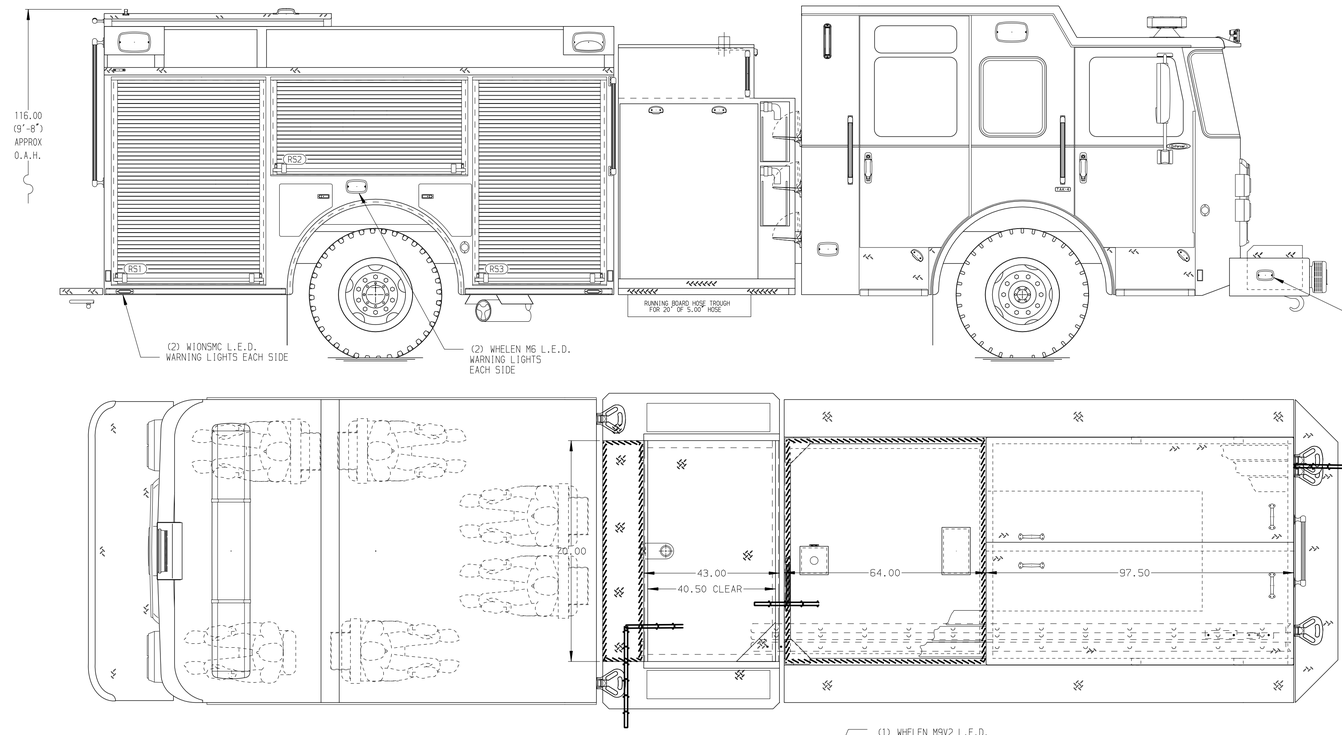

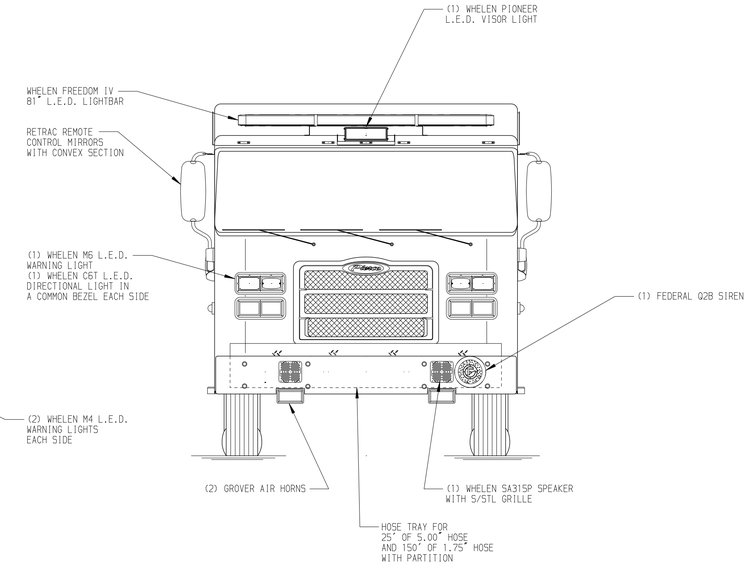

HOSEBED CAPACITY

BED 1
1000' OF 5.00" D.J. POLY HOSE

BED 2
200' OF 1.75" D.J. POLY HOSE

BED 3
200' OF 2.50" D.J. POLY HOSE

BED 4
200' OF 2.50" D.J. POLY HOSE

BED 5
OPEN

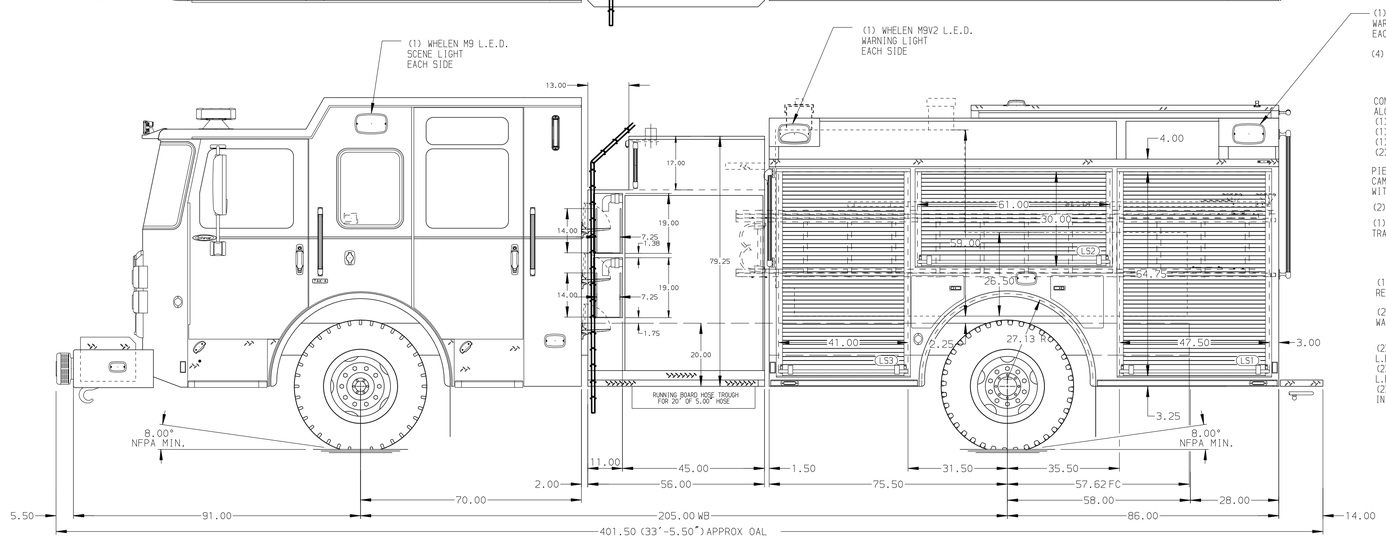

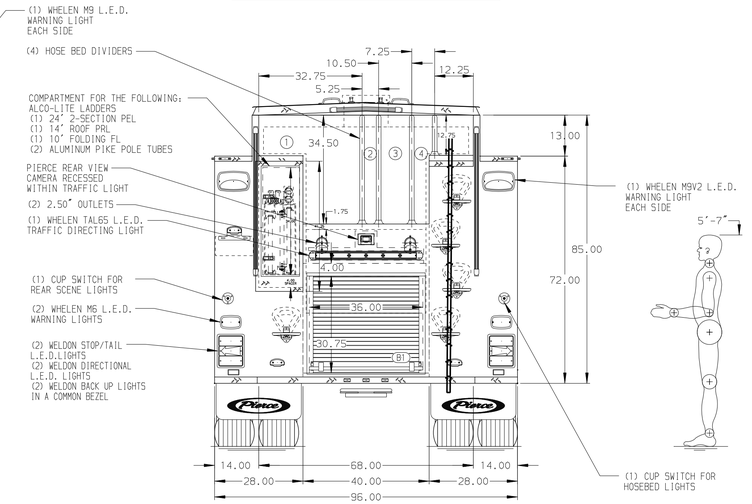

NOTE

DIMENSIONS SHOWN ARE APPROXIMATE AND ARE SUBJECT TO MINOR DEVIATIONS AS MAY OCCUR OR BE NECESSARY IN CONSTRUCTION.
MINOR DETAILS NOT SHOWN.

1. ONE 1.50 OUTLET WITH 2.00 PIPING AND SWIVEL LOCATED IN CENTER BUMPER TRAY RIGHT SIDE
2. SHORELINE RECEPTACLE WITH KUSSMAUL SUPER AUTO-EJECT LOCATED ON DRIVER SIDE OF THE CAB
3. AIR INLET/OUTLET WITH DISCONNECT COUPLING ON THE DRIVER SIDE PUMP PANEL
4. BATTERY CHARGER LOCATED IN COMPARTMENT PER SHOP ORDER
5. BATTERY CHARGE INDICATOR LOCATED DRIVER SIDE THRU WINDOW
6. SIX ADJUSTABLE SHELVES IN COMPARTMENTS PER SHOP ORDER
7. ONE FLOOR MOUNTED SLIDE-OUT TRAY IN COMPARTMENT PER SHOP ORDER
8. ONE SWING-OUT TOOLBOARD LOCATED PER SHOP ORDER
9. TWO TILT/SLIDE-OUT TRAYS LOCATED PER SHOP ORDER

REV	DATE	BY	CH
V	08DEC21	MMF	ZWE
V	09NOV21	MMF	ZWE
V	04NOV21	MMF	ZWE

CHASSIS DATA
MAKE: PIERCE
MODEL: ENFORCER

Pierce MANUFACTURING INC.

TITLE: Pierce Pumper Approval Drawing –
FOR: City of Fort Myers –
DWG NO.: 37564AD

JOB NO.	37564
SCALE	1:24
DATE	
DRAWN BY	MMF 200CT21
CHECKED BY	COL 200CT21
SHEET SIZE	D
SHEET NO.	1 OF 1

View File Created 08-DEC-2021 12:52:30