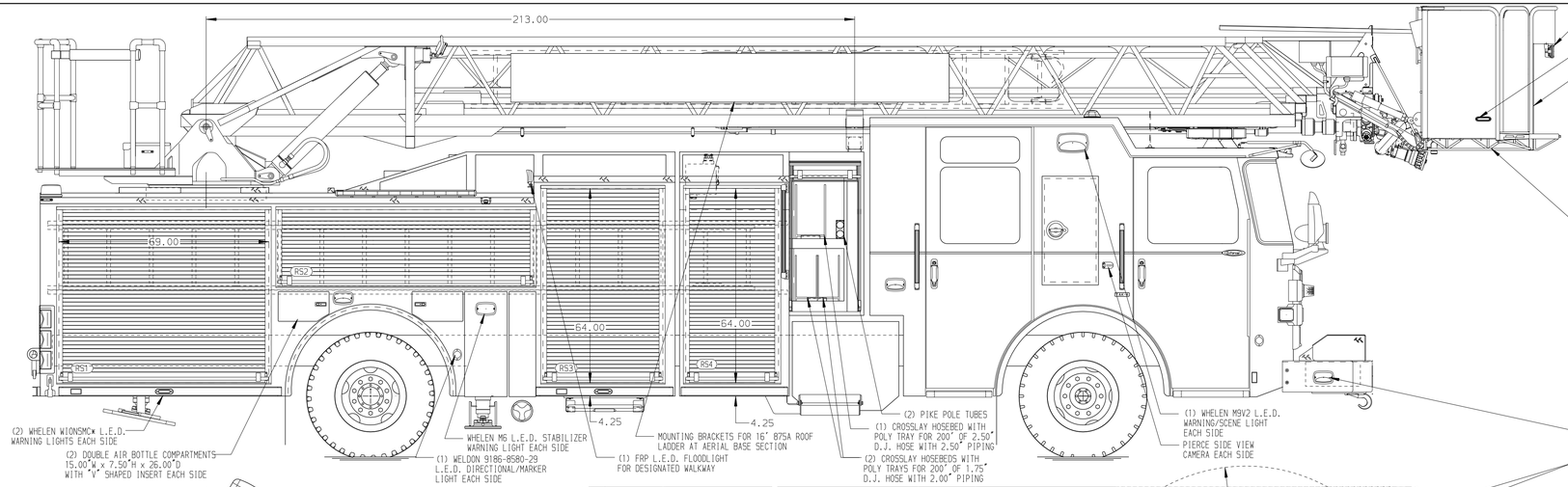

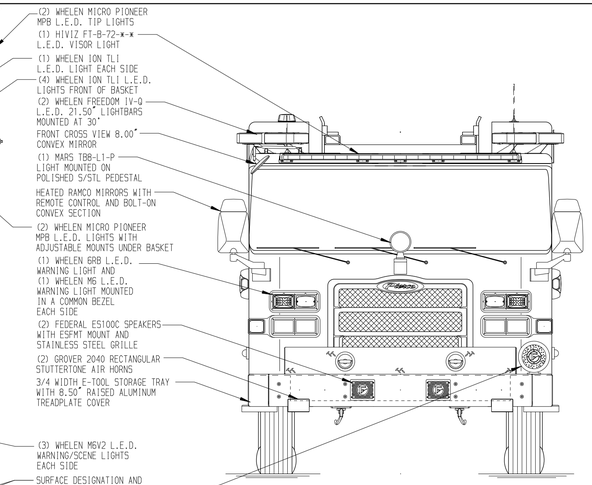

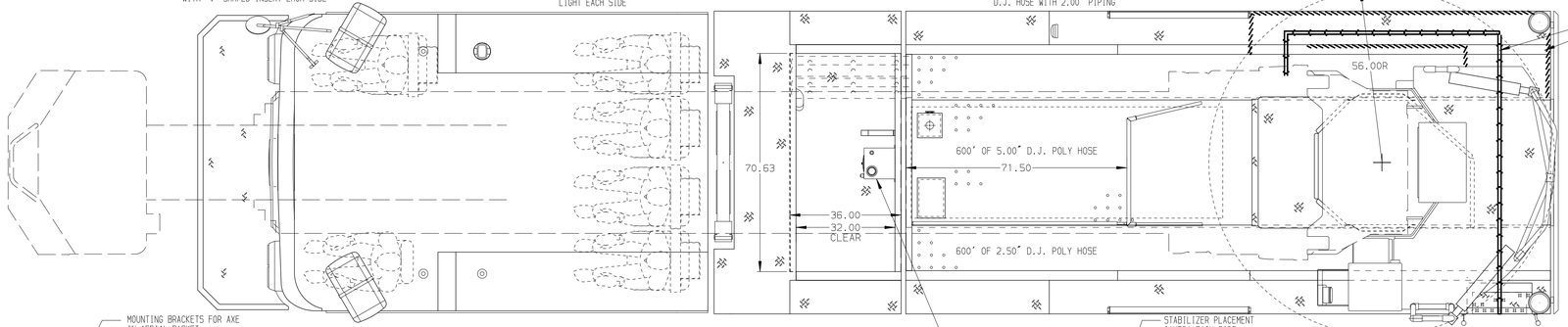

BODY	WATER TANK
110' Single Axle Platform Aluminum Body PUC	480 Gallon Poly Water Tank
COMPT,LEFT SIDE FRONT	Foam System
Full Height Rollup Forward	Husky 12 Single Agent Foam System
COMPT,LEFT SIDE REAR	Foam Cell
Full Height Rollup Rearward	20 Gallon Foam Cell, Reduced Water, PUC
COMPT,RIGHT SIDE FRONT	
Full Height Rollup Forward	
COMPT,RIGHT SIDE REAR	
Full Height Rollup Rearward	

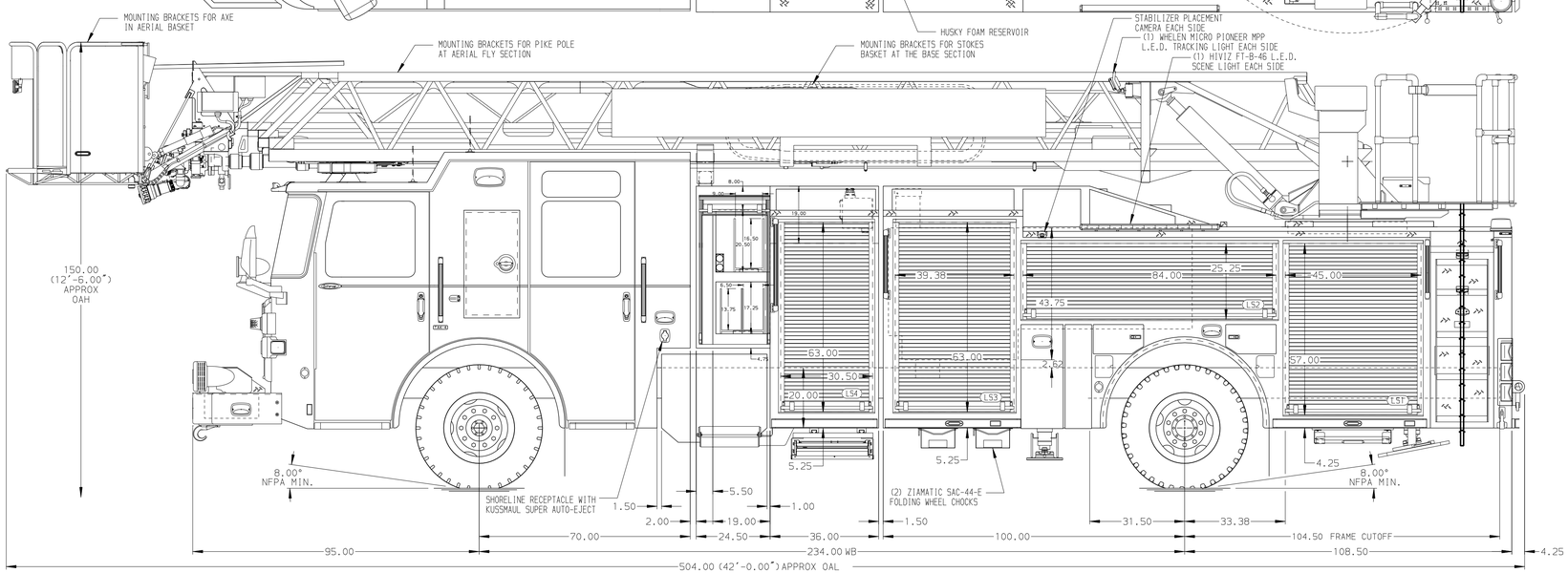

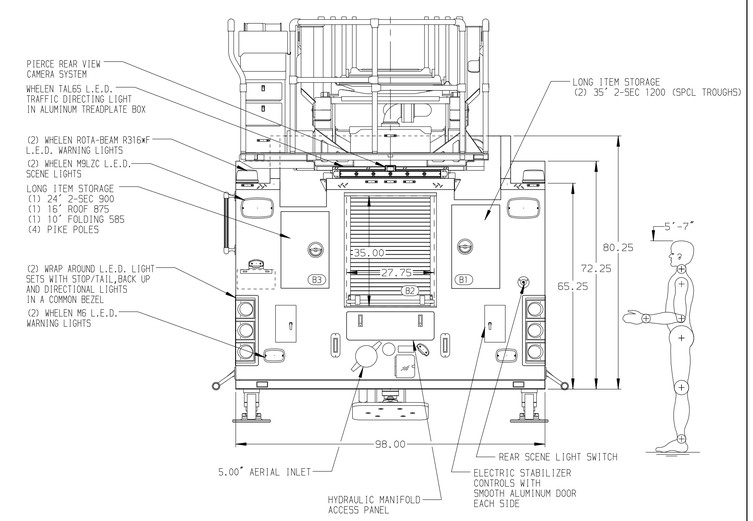

CHASSIS	CAB	AXLE,FRONT,CUSTOM	TRANSMISSION	PUMPHOUSE	CROSSLAYS,1.50"	SPEEDLAYS	SAFETY
Enforcer Chassis, PUC	7010 Notched Enforcer Cab, PUC	22,800 Lb TAK-4 Axle	Allison 5th Gen, 3000 EVS P	Control Zone, PAL/PAP PUC	(2) 1.50", Poly Trays, 200'	Not Required	Side Roll and Frontal Impact Protection
ENGINE	BUMPER	AXLE,REAR		PUMP	CROSSLAYS,2.50"	GENERATOR	
450 HP Cummins L9 Engine	26" Extended Painted Underslung	33,500 Lb Meritor Axle		1500 GPM Pierce PUC	(1) 2.50", Poly Tray, 200'	Generator Not Required	

CUSTOMER APPROVAL

APPROVED BY: _____

DATE: _____

Pierce MANUFACTURING INC.

NOTE

DIMENSIONS SHOWN ARE APPROXIMATE AND ARE SUBJECT TO MINOR DEVIATIONS AS MAY OCCUR OR BE NECESSARY IN CONSTRUCTION.
MINOR DETAILS NOT SHOWN.

1. BATTERY CHARGER LOCATED IN COMPARTMENT PER ORDER
2. L.E.D. LIGHT STRIPS LOCATED IN THE HOSE BED PER SHOP ORDER
3. PULL STRAP WITH SPECIAL LENGTH ON DOOR IN COMPARTMENT PER ORDER
4. TWELVE ADJUSTABLE FULL WIDTH/FULL DEPTH SHELVES IN COMPARTMENT PER ORDER
5. THREE FLOOR MOUNTED SLIDE-OUT TRAYS IN COMPARTMENT PER ORDER
6. ONE SWING-OUT ALUMINUM TOOL BOARD IN COMPARTMENT PER ORDER
7. ONE VERTICAL DIVIDER IN COMPARTMENT PER ORDER
8. PEGBOARD ON BACK WALL IN SIX COMPARTMENTS PER ORDER
9. STORAGE RACK FOR (3) AIR BOTTLES IN COMPARTMENT PER ORDER
10. L.E.D. LIGHTING ON AERIAL LADDER SECTIONS
11. 2-WAY INTERCOM SYSTEM BETWEEN AERIAL TIP OR PLATFORM AND TURNTABLE
12. 1250 GPM HIGH FLOW WATERWAY
13. REMOTE MONITOR CONTROLS AT PUMP PANEL
14. AIR INLET WITH DISCONNECT COUPLING IN DRIVERS STEP WELL OF CAB PER ORDER
15. BATTERY CHARGER INDICATOR IN DRIVERS STEP WELL OF CAB PER ORDER
16. AERIAL LIMITED RETRACTION NOT REQUIRED

REV	DATE	BY	CH
▽	-	-	-

CHASSIS DATA	
MAKE	PIERCE
MODEL	-
DWG NO.	37741AD
TITLE	110' ASCENDANT AERIAL PLATFORM AND BODY ASSEMBLY –
FOR	BROOKFIELD FIRE DEPARTMENT BROOKFIELD, IL
JOB NO.	37741
SCALE	1:24
DATE	
DRAWN BY	JGA 03MAR22
CHECKED BY	ZCH 04MAR22
SHEET SIZE	D
SHEET NO.	1 OF 1

View File Created 04-MAR-2022 13:52:36