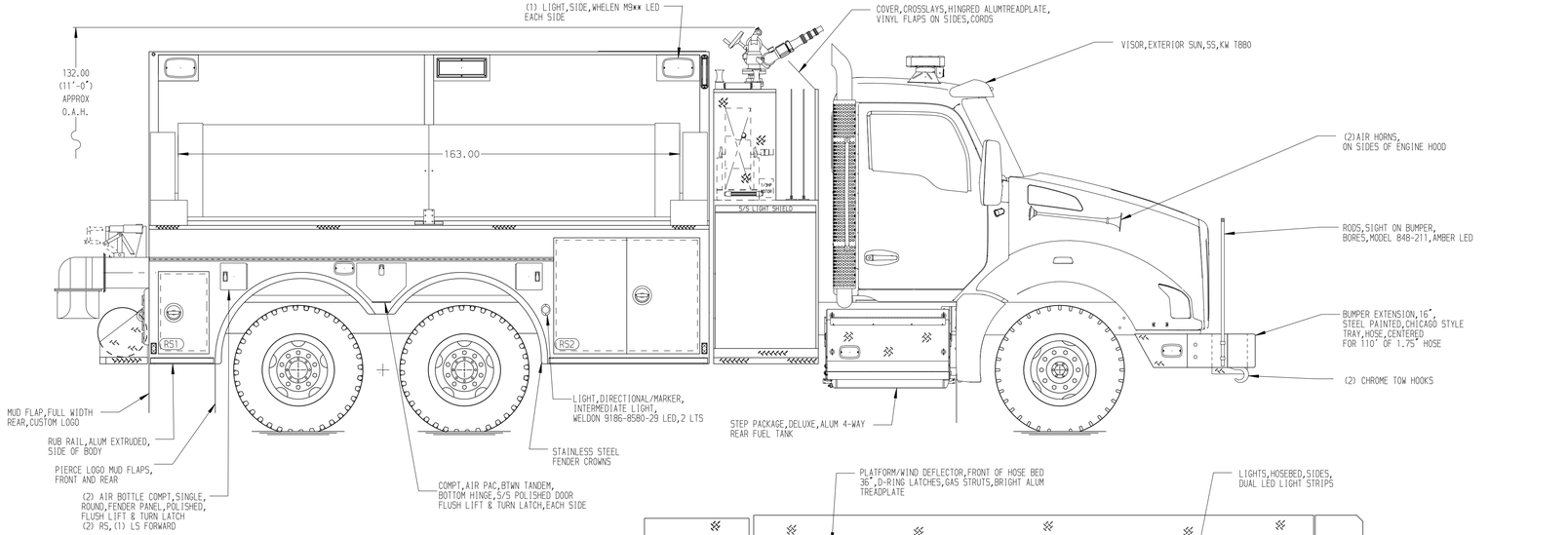

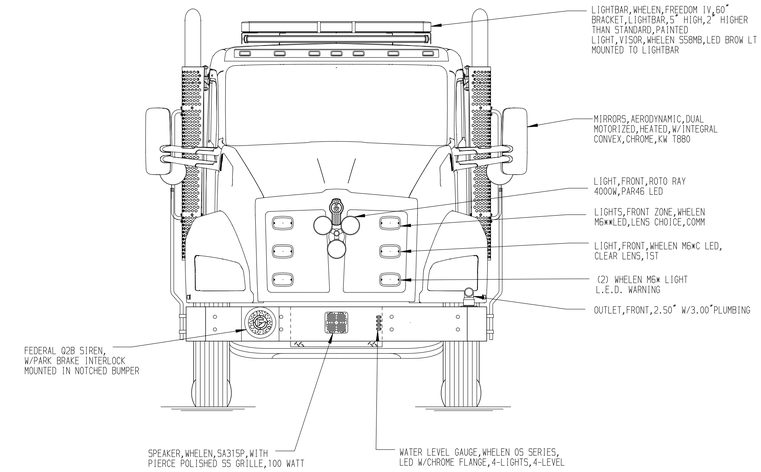

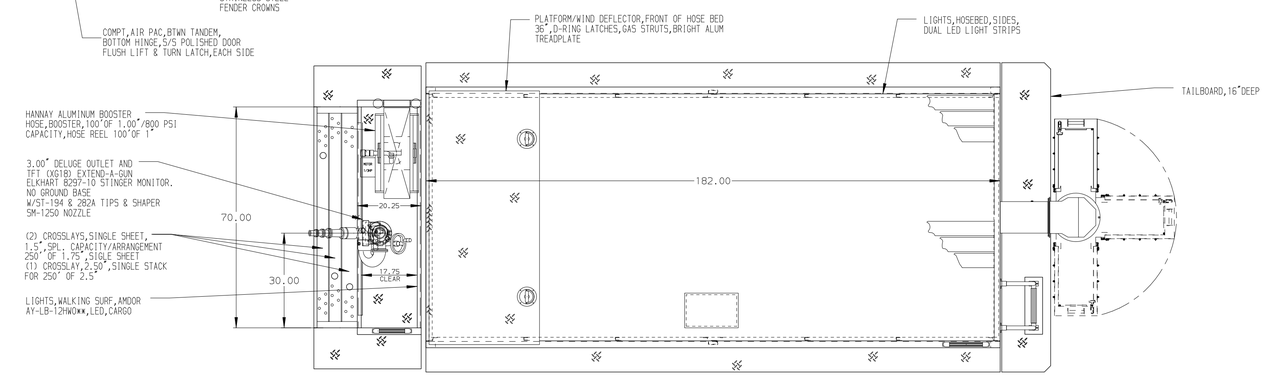

HOSEBED CAPACITIES

① 200' OF 4.00" D.J. HOSE

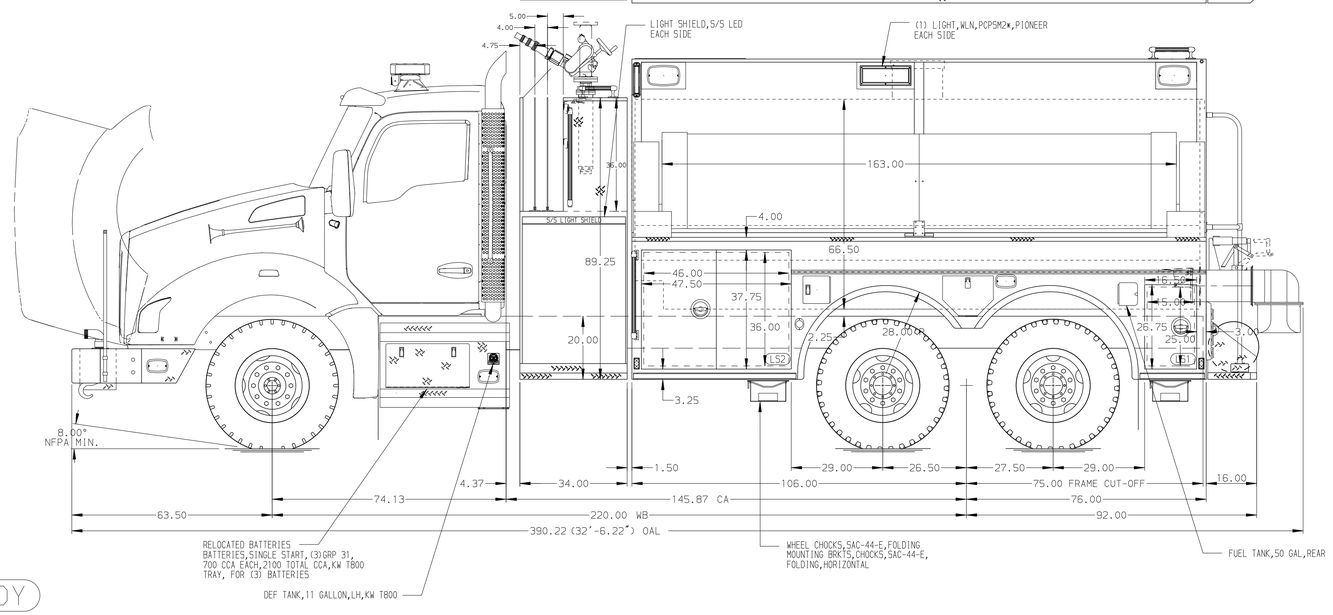

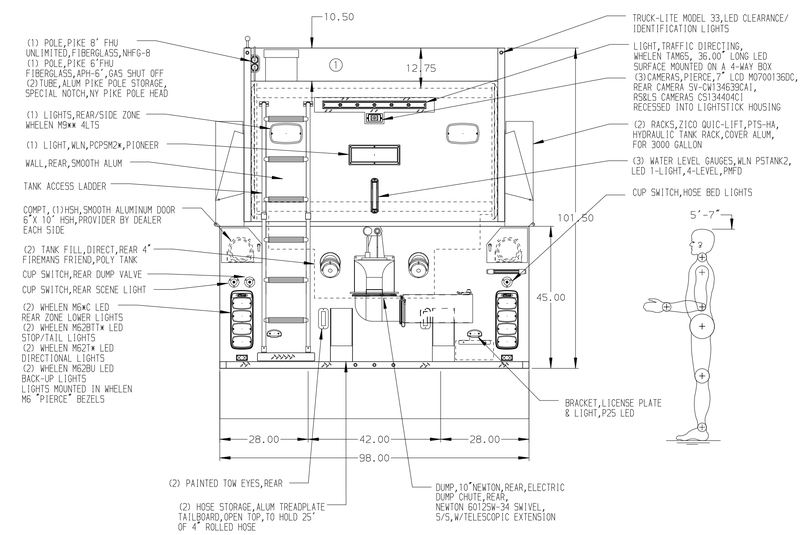

ALUMINUM BODY

NOTE

DIMENSIONS SHOWN ARE APPROXIMATE AND ARE SUBJECT TO MINOR DEVIATIONS AS MAY OCCUR OR BE NECESSARY IN CONSTRUCTION.
MINOR DETAILS NOT SHOWN.

REV	DATE	BY	CH
▽	-	-	-

CHASSIS DATA
MAKE: KENWORTH
MODEL: T880

TITLE: 1500-D-3000 POLY,182" DRYSIDE BODY
34"SIDE CONTROL,(2)1.5"(1)2.5"CROSSLAYS SINGLE STACK

FOR: COUNTY OF ORANGE,VIRGINIA
ORANGE, VIRGINIA

DWG NO. 37854AD

Pierce MANUFACTURING INC.
BRADENTON, FLORIDA

JOB NO.	37854
SCALE 1:24	DATE
DRAWN BY JLA	01NOV22
CHECKED BY AJA	03NOV22
SHEET SIZE D	SHEET NO. 1 OF 1

View File Created 04-NOV-2022 09:36:53