PUMPER

BODY
Medium Aluminum 2nd Gen Pumper

CHASSIS
Saber FR Chassis

CHASSIS

AXLE, FRONT, CUSTOM
18,000 lb Dana Axle

AXLE, REAR
27,000 lb Dana Axle

ENGINE
450 HP Cummins L9 Engine

TRANSMISSION
Allison 5th Gen, 3000 EVS P

BUMPER
19" Extended Painted Steel

CAB
6010 Saber FR Cab

BODY

WATER TANK
1000 Gallon Poly Water Tank

COMPT, PUMPER, REAR
51.25" FF Rollup Rear Compt

COMPT, PUMPER, LEFT SIDE
152" Rollup Full Height Front & Rear FDLER

COMPT, PUMPER, RIGHT SIDE
152" Rollup Full Height Front & Rear FDLER

FIRE SUPPRESSION

PUMPHOUSE
45" Control Zone Side Mount

PUMP
1500 GPM Darley PSM

CROSSLAYS, 1.50"
(2) 1.50" Standard Capacity

CROSSLAYS, 2.50"
2.50" Crosslay Not Required

SPEEDLAYS
Speedlays Not Required

GENERATOR
Generator Not Required

Foam System
Foam System Not Required

Foam Cell
Foam Cell Not Required

Side Roll and Frontal Impact Protection

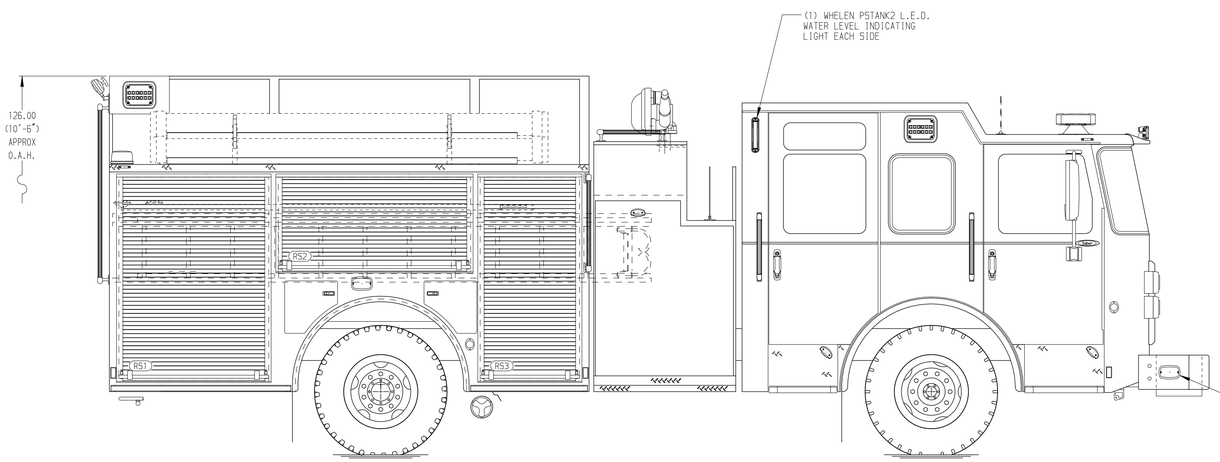

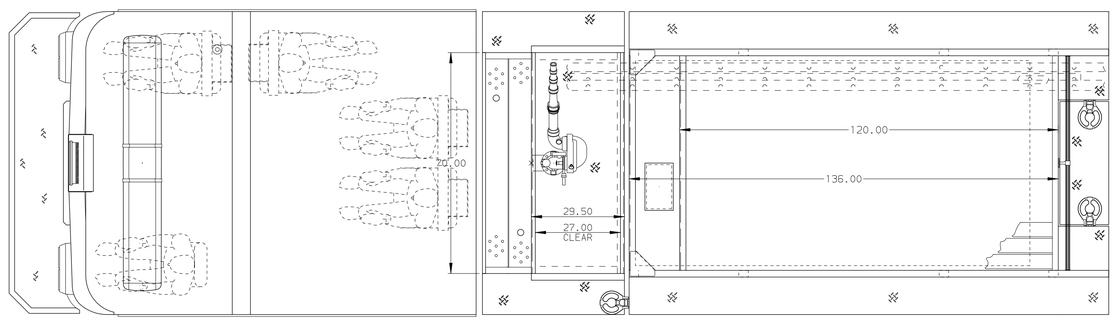

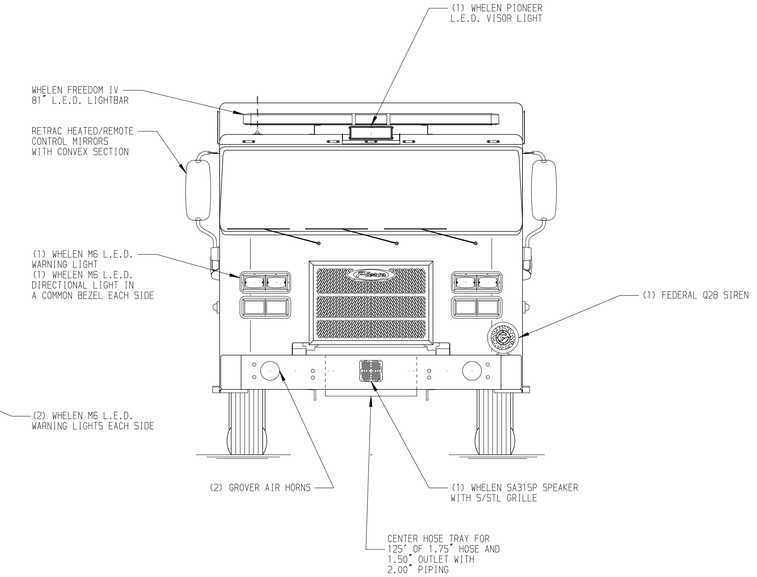

HOSEBED CAPACITY

BED 1
400' OF 3.00" D.J. POLY HOSE

BED 2
1000' OF 5.00" D.J. POLY HOSE

BED 3
600' OF 3.00" D.J. POLY HOSE

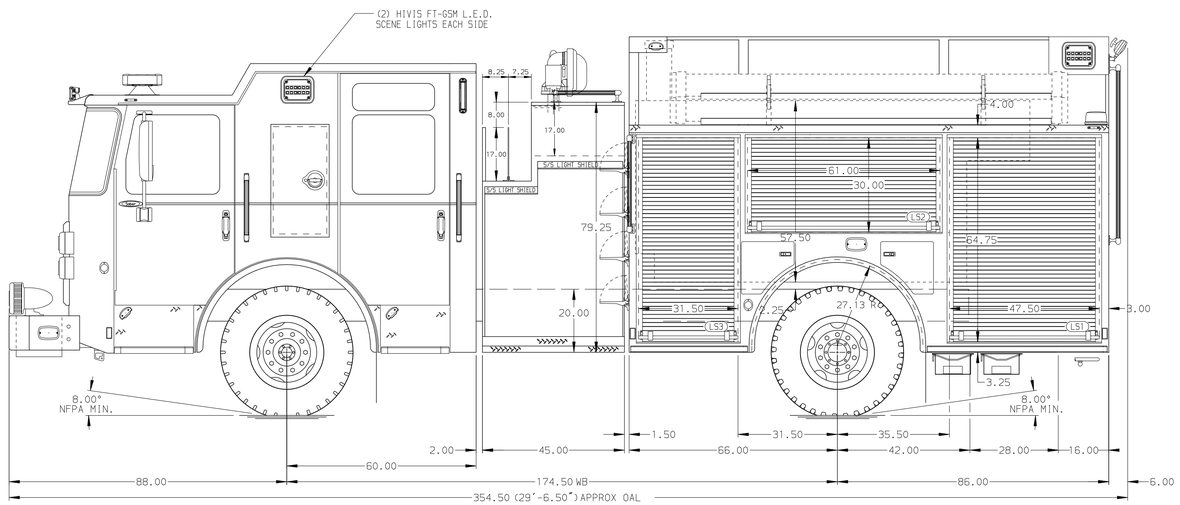

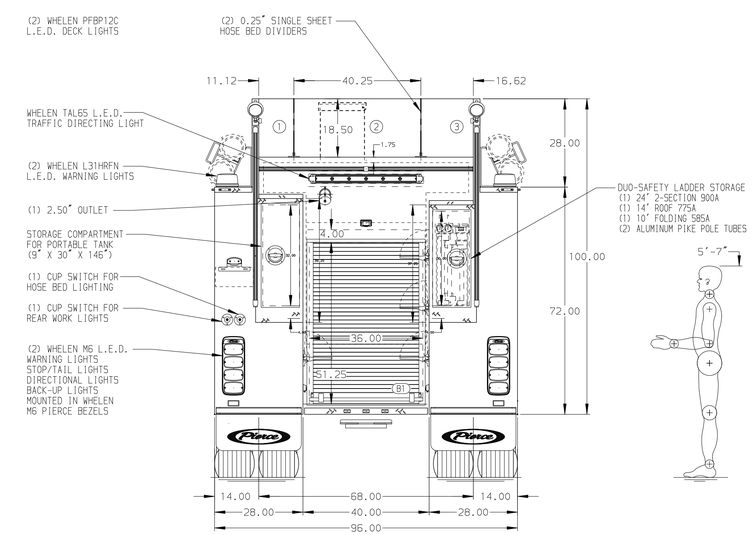

NOTE
DIMENSIONS SHOWN ARE APPROXIMATE AND ARE SUBJECT TO MINOR DEVIATIONS AS MAY OCCUR OR BE NECESSARY IN CONSTRUCTION.
MINOR DETAILS NOT SHOWN.

CUSTOMER APPROVAL
APPROVED BY: _____
DATE: _____

Pierce MANUFACTURING INC.

				CHASSIS DATA	TITLE	Pierce Pumper Approval Drawing -	DRAWN BY COL 03FEB22
				MAKE PIERCE	FOR	Highland VFD -	CHECKED BY MMF 03FEB22
REV	DATE	BY	CH	MODEL SABER FR	DWG NO.	37896AD	SHEET SIZE D / SHEET NO. 1 OF 1

JOB NO. 37896
SCALE 1:24
DATE

View File Created 03-FEB-2022 14:46:48