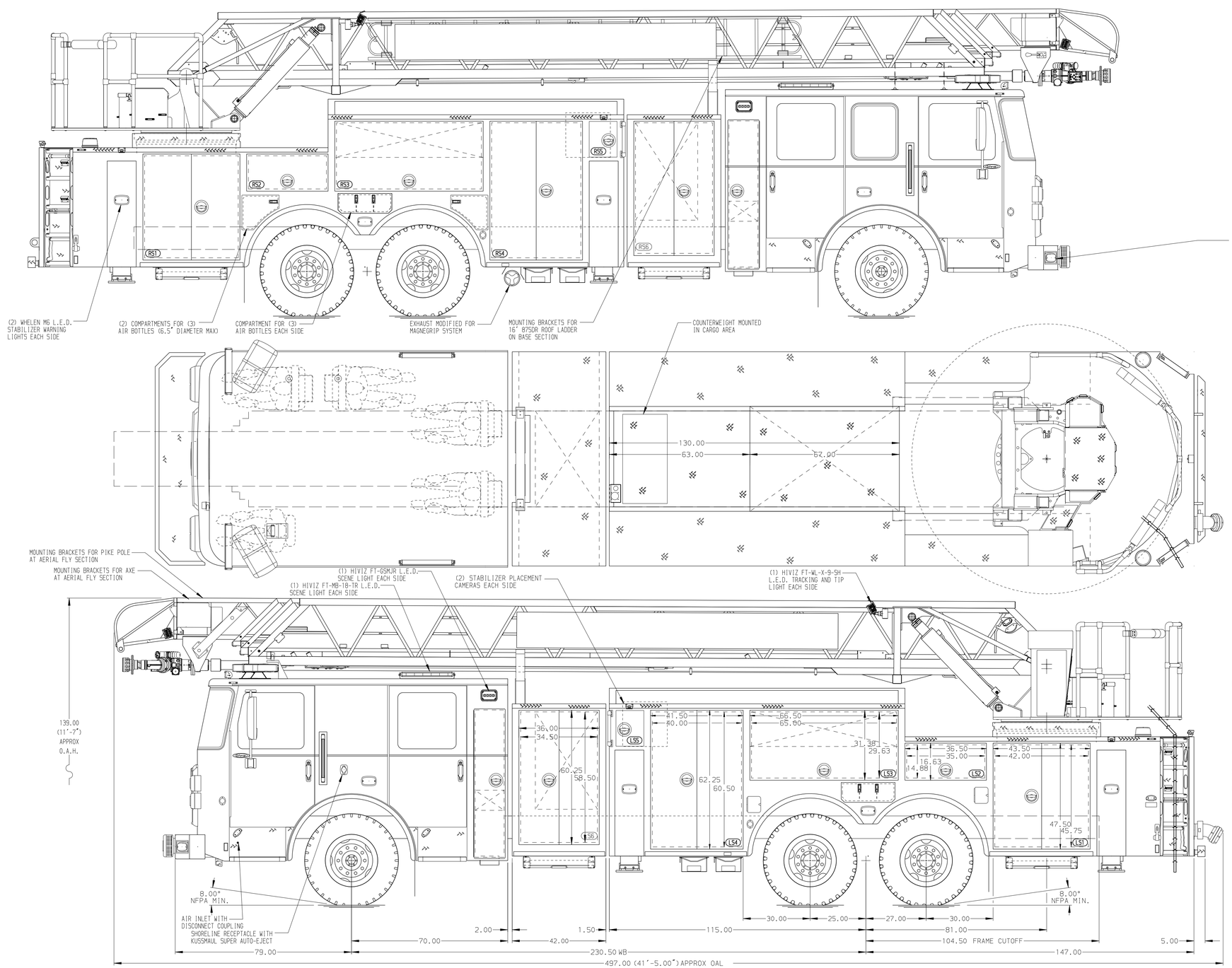

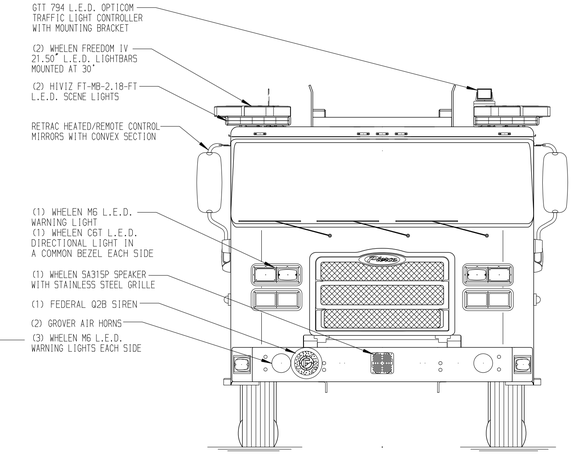

BODY
Aerial, HD Ladder 105', Alum Body
COMPT,LEFT SIDE FRONT
FH/FD Lap Forward w/o Chute
COMPT,LEFT SIDE REAR
FH/FD Lap Rearward
COMPT,RIGHT SIDE FRONT
FH/FD Lap Forward w/o Chute
COMPT,RIGHT SIDE REAR
FH/FD Lap Rearward

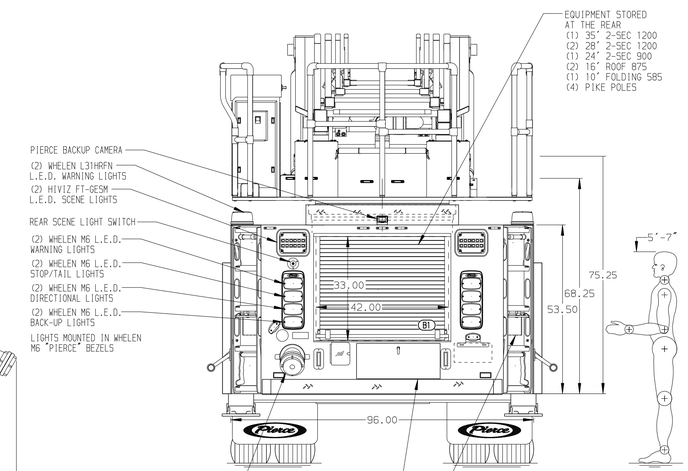

CHASSIS	CAB	AXLE,FRONT,CUSTOM	TRANSMISSION	COMPARTMENT-NO PUMP	SAFETY
Enforcer Chassis	7000 Enforcer Cab	20,000 Lb Dana Axle	ALLison 5th Gen, 4000 EVS P	42" Wide w/Double Doors	Side Roll and Frontal Impact Protection
ENGINE	BUMPER	AXLE,REAR	GENERATOR		
500 HP Cummins X12 Engine	19" Extended Painted Steel	48,000 Lb Meritor Axle	Generator Not Required		

NOTE

DIMENSIONS SHOWN ARE APPROXIMATE AND ARE SUBJECT TO MINOR DEVIATIONS AS MAY OCCUR OR BE NECESSARY IN CONSTRUCTION.
MINOR DETAILS NOT SHOWN.

1. BATTERY CHARGER/COMPRESSOR LOCATED IN COMPARTMENT PER ORDER
2. BATTERY CHARGER INDICATOR LOCATED ON DRIVER'S SEAT RISER
3. S/STL DRIP PAN/GUARD FOR ROLL-UP DOOR LOCATED IN COMPARTMENT PER ORDER
4. TEN ADJUSTABLE FULL WIDTH/FULL DEPTH SHELVES IN COMPARTMENT PER ORDER
5. ONE 1/2 TRANSVERSE ADJUSTABLE 1-WAY SLIDE-OUT TRAY IN COMPARTMENT PER ORDER
6. FOUR FLOOR MOUNTED SLIDE-OUT TRAYS IN COMPARTMENT PER ORDER
7. TWO SWING-OUT TOOL BOARD WITH PEGBOARDS PATTERN IN COMPARTMENT PER ORDER
8. ONE ADJUSTABLE TOOLBOARD MOUNTED ON A TRANSVERSE TRAY IN COMPARTMENT PER ORDER
9. ONE 120V RECEPTACLE STRIP IN CAB PER ORDER
10. FOUR 120V DUPLEX RECEPTACLES IN COMPARTMENT PER ORDER
11. TRIDENT FOLDING STEPS ON AERIAL DEVICE
12. STABILIZERS MODIFIED FOR 18" GROUND PENETRATION
13. L.E.D. LIGHTING ON AERIAL LADDER SECTIONS
14. 2-WAY INTERCOM SYSTEM BETWEEN AERIAL TIP OR PLATFORM AND TURNTABLE
15. AERIAL PEDESTAL RAISED 3.00"
16. TURNTABLE WELDMENT LOWERED 2.00"
17. AERIAL 7.00" LIMITED RETRACTION
18. LIFTING EYE RESCUE ATTACHMENT AT AERIAL TIP
19. AIR HORN CONTROLS AT AERIAL TURNTABLE

MAXIMUM OAH 138"-EXCEEDED

REV	DATE	BY	CH
▽	-	-	-

CHASSIS DATA
MAKE: PIERCE
MODEL: ENFORCER

CUSTOMER APPROVAL
APPROVED BY:
DATE:

Pierce MANUFACTURING INC.

TITLE: 100' HSL AERIAL LADDER AND BODY ASSEMBLY
FOR: PEABODY FIRE DEPARTMENT, PEABODY, MA
DWG NO.: 37906AD

JOB NO.	37906
SCALE	1:24
DATE	
DRAWN BY	JGA
	13APR22
CHECKED BY	CRI
	18APR22
SHEET SIZE	D
SHEET NO.	1 OF 1

View File Created 18-APR-2022 12:04:48